Sierra County Commission
Sierra County Commission Chambers
1712 N. Date Street, Truth or Consequences, NM 87901
Tuesday, March 21, 2023

AMENDED AGENDA

ALL MEMBERS OF THE PUBLIC WILL BE ABLE TO WATCH AND LISTEN TO THE MEETING VIA: (facebook.com/SCEmergencyServices) (Local radio KCHS 101.9

Call to Order: 9:45 AM Public Hearing – Transfer of Ownership of Dispenser Liquor License 0603 in Winston, New Mexico and Consideration of Transfer of Liquor License

Roll Call: Travis Day-Chairman
James E. Paxon-Vice-Chair
Hank Hopkins -Commissioner
Shelly K. Trujillo-Clerk
Nance, Pato & Stout, LLC-Attorney
Amber Vaughn-County Manager

Pledge of Allegiance

New Mexico State Flag Pledge-I salute the flag of the State of New Mexico and the Zia symbol of perfect friendship among united cultures.

Introduction of Guests

I. **Approval of Agenda**
II. **Approval of Minutes**
   A. Regular Meeting – February 21, 2023
III. **Public Comment: Limited to 3 Minutes**
IV. **Consent Agenda:**
   A. Resolution No.110-148 Accounts Payables
   B. Resolution No. 110-149 Budget Adjustments
   C. Resolution No. 110-151 Budget Transfer
   D. Resolution No. 110-150 Indigent Claims
   E. Indigent Burial B2023-04
   F. Indigent Burial B2023-05
   G. Letter of Support for RISE Grant Application
   H. Letter of Support for Sierra Vista Hospital Congressionally Directed Spending
   I. Letter of Support for Vocational Center
V. **Presentations/Reports:**
   A. Years of Service Awards
   B. Department Reports
   C. Prescribed and Wildfire Planning for 2023-Anthony James
VI. **Board of Finance:**
   A. February Reconciliation
VII. **Old Business:**
   A. Consideration of Transfer of Liquor License
VIII. **New Business:**

A. SWCC Water Quality and Conservation Grant Program-Fairgrounds Improvements

IX. **Contracts-Agreements-Procurement:**

A. Contract Agreement Update-Matthew 25
B. Flood Lease with the City of T or C
C. Lonestar-CES-57X Western Star Transport Tractor-Road
D. Desert West Enterprises-CES-Microsurfacing Materials-Road
E. 411 Equipment-State Price Agreement-Pumper Tender-CVFD
F. MES-HGAC BUY-Air Packs-HVFD
G. Amendment to the Opioid Remediation Collaborative Joint Powers Agreement
H. Executed Opioid Remediation Collaborative
I. Cooperative Forest Road Agreement Between the County of Sierra and the USDA, Forest Service Cibola National Forest and National Grasslands
J. State of New Mexico Department of Homeland Security & Emergency Management Subrecipient Subgrant Agreement for the Stonegarden Activities

X. **Resolutions-Ordinances-Proclamations:**

A. Resolution 110-152-Sierra County Road Mileage Certification
B. Resolution 110-153-Clarification of Elected Official's Salaries
C. Resolution 110-154-Resolution Confirming Sierra County to Participate in the New Mexico Department of Transportation Project Fund Call for Projects

XI. **Executive Session (Section 10-15 E thru H):**

Pending and Threatened Litigation:
Personnel
Real Estate:

XII. **Open Session Actions from Executive Session: Adjourn**

Next proposed Scheduled Meeting: Regular Meeting, Tuesday, April 18, 2023, at 10:00 AM. Items for the agenda must be submitted to the Sierra County Administration Office no later than 5:00pm on the Monday the week before the meeting.

If you are an individual with a disability who is in need of a reader, amplifier, qualified sign language interpreter, or any other form of auxiliary aid or service to attend or participate in the hearing or meeting please contact the Sierra County Manager, at 1712 N. Date Street, Suite D, Truth or Consequences, New Mexico 87901, phone (575) 894-6215 at least one (1) week prior to the meeting or as soon as possible. Public documents, including the agenda and minutes, can be provided in various accessible formats. Please contact the Sierra County Manager if a summary or other type of accessible format is needed.

NMRLD

NEW MEXICO
REGULATION &
LICENSING DEPARTMENT

STATE OF NEW MEXICO
MICHELLE LUJAN GRISHAM, GOVERNOR
Linda M. Trujillo, Superintendent
Andrew Vallejos, Director

January 31, 2023

Certified Mail No.: 7021 2720 0001 2205 0733

Sierra County
Clerk: Connie Greer (R)
100 N. Date Street - Suite 6
Truth or Consequences, NM 87901

Lic. No. /Appl. No.:	**License No. 0603**
Name of Applicant:	R and W, LLC
Doing Business As:	Diamond Bar
Proposed Location:	Hwy 52 S, Winston, NM 87943

The Director of the Alcoholic Beverage Control Division (ABC) has reviewed the referenced Application and granted **Preliminary Approval.** It is being forwarded to you for Local Option District approval or disapproval of the Liquor License Application.

Notice of the Public Hearing required by the Liquor Control Act **shall be given by the governing body by publishing a notice** of the date, time, and place of the hearing **twice during the 30 days prior to the hearing** in a newspaper of general circulation within the territorial limits of the governing body. **The first notice must be published at least thirty (30) days before the hearing. Both publications must occur before a hearing can be conducted.** The notice shall include:

(A) Name and address of the Applicant/Licensee;
(B) The action proposed to be taken;
(C) The location of the licensed premises.

In addition, if the Local Option District has a website, **the Notice shall also be published on the website.**

While the law states that "within forty-five **(45)** days after receipt of a Notice from the Alcoholic Beverage Control, the governing body shall hold a Public Hearing in the question of whether the department should approve the proposed issuance or transfer", we recognize the potential for conflict between the requirement for publication of 30 day notice and the 45 day hearing requirement.

With that in mind, when a local governing body receives a liquor license application from ABC, that governing body has a couple of options:

1) Hold a hearing on the license application within the statutory time frame of forty-five (45) days, as required by the Liquor Control Act, and comply with all other statutory and regulatory procedures and notify ABC of your decision within thirty (30) days of the hearing;
2) Request from ABC an extension of time, past the forty-five (45) days, designating how much additional time will be needed to conduct the hearing in compliance with all statutory and

regulatory procedures. After the extension is granted and the hearing is held, notify ABC of your decision within thirty (30) days of the hearing;

ABC has no preference in the option you choose.

The governing body is required to send notice by certified mail to the Applicant of the date, time, and place of the Public Hearing. The governing body may designate a Hearing Officer to conduct the hearing. **A record shall be made** of the hearing.

The Applicant is seeking a Transfer of Ownership of Dispenser Liquor License No. 0603.

Within thirty (30) days after the Public Hearing, the governing body shall notify ABC of their decision to approve or disapprove the issuance or transfer of the license by signing the enclosed original Page 1 of the Application. The original Page 1 of the Application must be returned together with the notices of publication. **If the Governing Body fails to either approve or disapprove the issuance or transfer of the license within thirty days after the Public Hearing, the Director may issue the license.**

If the Governing Body disapproves the issuance or transfer of the license, it shall notify ABC within thirty (30) days setting forth the reasons for the disapproval. A copy of the Minutes of the Public Hearing shall be submitted to ABC with the Notice of Disapproval (*Page 1 of the Application, noting disapproval*).

Respectfully,

Desirae D. Griego
Admin Law Judge | Hearing Officer
NM Regulation & Licensing Department
Alcoholic Beverage Control Division
Phone: (505) 476-4552 | (505) 795-4091
Email: Desirae.Griego@rld.nm.gov

Enclosures:

1. Original Page 1 of the Application (*must be signed and returned w/notices of publication*)
2. Copy of Page 2 of the Application
3. Copy of Public Comment

NMRLD

NEW MEXICO REGULATION & LICENSING DEPARTMENT

STATE OF NEW MEXICO
MICHELLE LUJAN GRISHAM, GOVERNOR
Linda M. Trujillo, Superintendent
Andrew Vallejos, Director

Transfer of Dispenser Type Liquor Application | $200.00 Application Fee, non-refundable

ABC USE ONLY: Application Fee $ 200.00 Received on: 11-9-2022 Receipt No. Check #623

License Fee $ _____ Received on: _____ Receipt No. _____

Application Number: _____ Local Option District: _____

License Number: 0603 License Type: Dispenser

Record Owner of Existing License: Richard L. Miranda

Current D/B/A Name: Diamond Bar

Current Premises Address: HWY 52 S, Winston, NM 87943

Current LOD: Sierra County Is License moving out of Local Option District? ☐Yes ☐No

Check appropriate boxes:

Application is for: ☒Transfer of Ownership ☐Transfer of Ownership and Location ☐Transfer of Location Only

Applicant is ☐Individual ☐Limited Liability Company ☐Corporation ☐Partnership (General/Limited)

NAME OF APPLICANT: R and W, LLC

D/B/A Name to be used: Diamond Bar Business Phone No: 575-740-2208

Mailing Address: P. O. Box 787, Williamsburg, NM 87942-0787

Email (required) reedtire@yahoo.com

Physical location where license is to be used: ~~109 Broadway, Winston, NM 87493~~ Hwy 52 S, Winston, NM 87943
(Include street number / highway number / state road, city, state, and zip code)

County: Sierra

Are alcoholic beverages currently being dispensed at the proposed location ☐Yes ☐No If Yes, License # / Type: Dis 0603

Contact Person: Jerry Hamm Phone #: 505-284-0316 Email: jhammlibo@aol.com

I, (print name) Sara Myers, as (title) Manager being first duly sworn upon oath deposes and says: that he/she is the applicant or is authorized by the applicant to make this application; that he/she has read the same; knows the contents therein contained are true. Applicant(s) agree(s) that if any statements or representations herein are found to be false, the Director may refuse to issue or renew the license or may cause the license to be revoked at any time.

You must sign and date this form before a Notary Public.

Signature of Applicant: Sara Myers Date: 9-8-22

STATE OF NEW MEXICO
NOTARY PUBLIC
Amanda B. Cardona
Commission No. 1094124
August 17, 2025

Notary Public Use Only: State of New Mexico, County of Sierra

SUBSCRIBED AND SWORN TO before me this 8th day of September, 2022

By Sara Myers Notary Public: Amanda B. Cardona

Date my Commission Expires: Aug. 17, 2025

Local Option District Use Only: Local Governing Body of _____ City, County, Village

Public Hearing held on _____ 20____ Please check one: ☐ Approved ☐ Disapproved

Signature of City/County Official: _____ Title: _____

Alcoholic Beverage Control Division Use Only: ☐ Approved ☐ Disapproved, _____

Signed by Director: _____ Date: _____

RECEIVED
DEC 13 2022
ALCOHOLIC BEVERAGE CONTROL

Premises Location, Ownership, and Description | NMSA §60-6B-10 | Page 2

1. The land and building which is proposed to be the licensed premises is: (check one)

☐ Owned by Applicant, copy of deed/document attached

☑ Leased by Applicant, copy of lease/document attached

☐ Other (provide details): _____

2. If the land and building are not owned by Applicant, indicate the following:

A. Owner(s): Richard L. Miranda

B. Date and Term of Lease: August 29, 2022 1 year term expires August 31, 2023

3. Premises location is Zoned (example C-1, see Zoning Statement): _____

Zoning Statement attached, ☐Yes ☑No Must be obtained from the Local Government, listing the proposed location by address, Type of Zone, state whether alcoholic beverages are allowed at proposed location, and if applicable, whether packaged sales, patio service and/or manufacturing is allowable. If there is no zoning in the proposed location, attach Statement from the local government, indicating there is no zoning.

4. Distance* from nearest Church: (Property line of church to closest point of licensed premises—shortest distance)

Name of Church: St. Joseph Church Miles/feet: Approx. 18 Miles

Address/location of Church: NM Highway 152, Sierra Cuunty, NM (street address unknown)

5. Distance* from nearest School: (Property line of school to closest point of licensed premises—shortest distance)

Name of School: T or C Middle School Miles/feet: Approx. 26 miles

Address/location of School: Truth or Consequesces, NM

6. Attach Detailed Floor Plan, must include the Total Square Footage of premises; List nearest cross street; Show which direction is North; Show each level (floor) where alcoholic beverages will be sold or consumed, exterior walls, doors, and interior walls; Patio Area with type of barrier used; Highlight Bonded Areas. The floor plan should be no larger than 8½ x 11 inches and must be labeled with designated areas highlighted, which will reflect the proposed Licensed Premises.

7. Type of Operation: ☐ Hotel ☑ Lounge ☐ Package Grocery ☐ Racetrack

☐ Restaurant ☐ Craft Distiller ☐ Small Brewer ☐ Winery ☐ Wholesaler

☐ Other (specify): _____

***NOTE**: If the distance is beyond 300 feet, but less than 400 feet, and the Applicant does not admit that the location is within 300 feet and requests a waiver from the LOD, a Registered Engineer or Licensed Surveyor must complete a Survey Certificate showing the exact distance.

NMRLD
NEW MEXICO REGULATION & LICENSING DEPARTMENT

RECEIVED
JAN 04 2023
ALCOHOL & GAMING DIVISION

STATE OF NEW MEXICO
MICHELLE LUJAN GRISHAM, GOVERNOR
Linda M. Trujillo, Superintendent
Andrew Vallejos, Director

PUBLIC COMMENT

We welcome public comments, either positive or negative, regarding liquor license applications. If you feel the approval of the liquor license would endanger or adversely affect your community, please provide all issues of concern. If you are in support of issuing the liquor license, please document that below.

Establishment/Applicant Name: R + W, LLC

Proposed Location: 1003 Broadway, Winston, NM 87943

In the City of: Winston, NM

Summarize your comment or concerns, attach addition pages if necessary:

As residents of Winston, we object to the issuing of this liquor license in our comunity. As can be seen from the inclosed pictures, no improvements have been made to this property in over 10 years, and there is little to no hope of it being a benefit in this town. this business will only deliver more of the same.

We may not stop this, but at ~~least~~ leaste we let it be known our feelings.

Your Name: James Springer Date: 12-29-22

Your Street Address: 528 Republic Rd

City: Winston State: NM Zip: 87943

How may we contact you?

Phone: 575-894-0394 E-mail: jimdspringer157@gmail.com

You may submit your comments or concerns on-line through the RLD website, or mail this form to Regulation & Licensing Department Attn: AGD, PO Box 25101, Santa Fe, NM 87504-5101.

Revised 2/8/2021

Page 2
Additional names of people objecting to the liquor liscense in Winston, NM

Name Diane M Springer Address 528 Republic Rd Winston, NM PH 575-894-0394

Name John Johnson Address 952 Grafton Rd PH 409 224-4201

Name Dianne Neely Address 952 Grafton Rd. PH 575-740-8495

Name TESSA LACK Address PO Box 143 WINSTON, NM 87943 PH 575-894-6018

Name Randy Lack Address P.O. Box 143 WINSTON NM PH 575-894-6018

Name _____ Address _____ PH _____

Name _____ Address _____ PH _____

Name _____ Address _____ PH _____

Name _____ Address _____ PH _____

Name _____ Address _____ PH _____

Name _____ Address _____ PH _____

Name _____ Address _____ PH _____

Name _____ Address _____ PH _____

Name _____ Address _____ PH _____

Name _____ Address _____ PH _____

Name _____ Address _____ PH _____

Name _____ Address _____ PH _____

Name _____ Address _____ PH _____

Name _____ Address _____ PH _____

Winston Patrol Yard
Google Earth
Imagery date: 5/21/13~...
20 m
Camera: 1,965 m 33°20'44"N 107°38'51"W ...

Front
BAR
SALOON

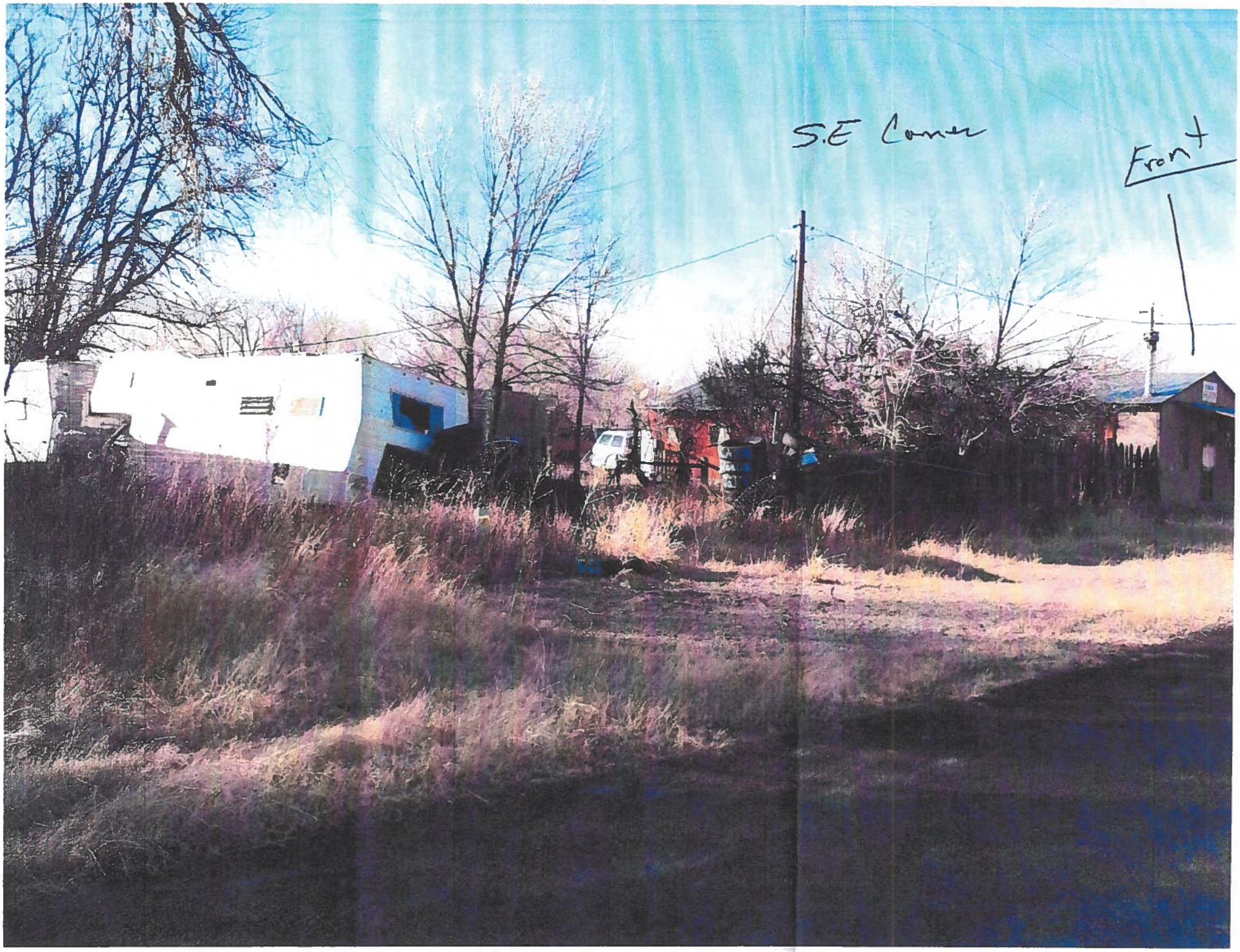
S.E Corner
Front

Rear

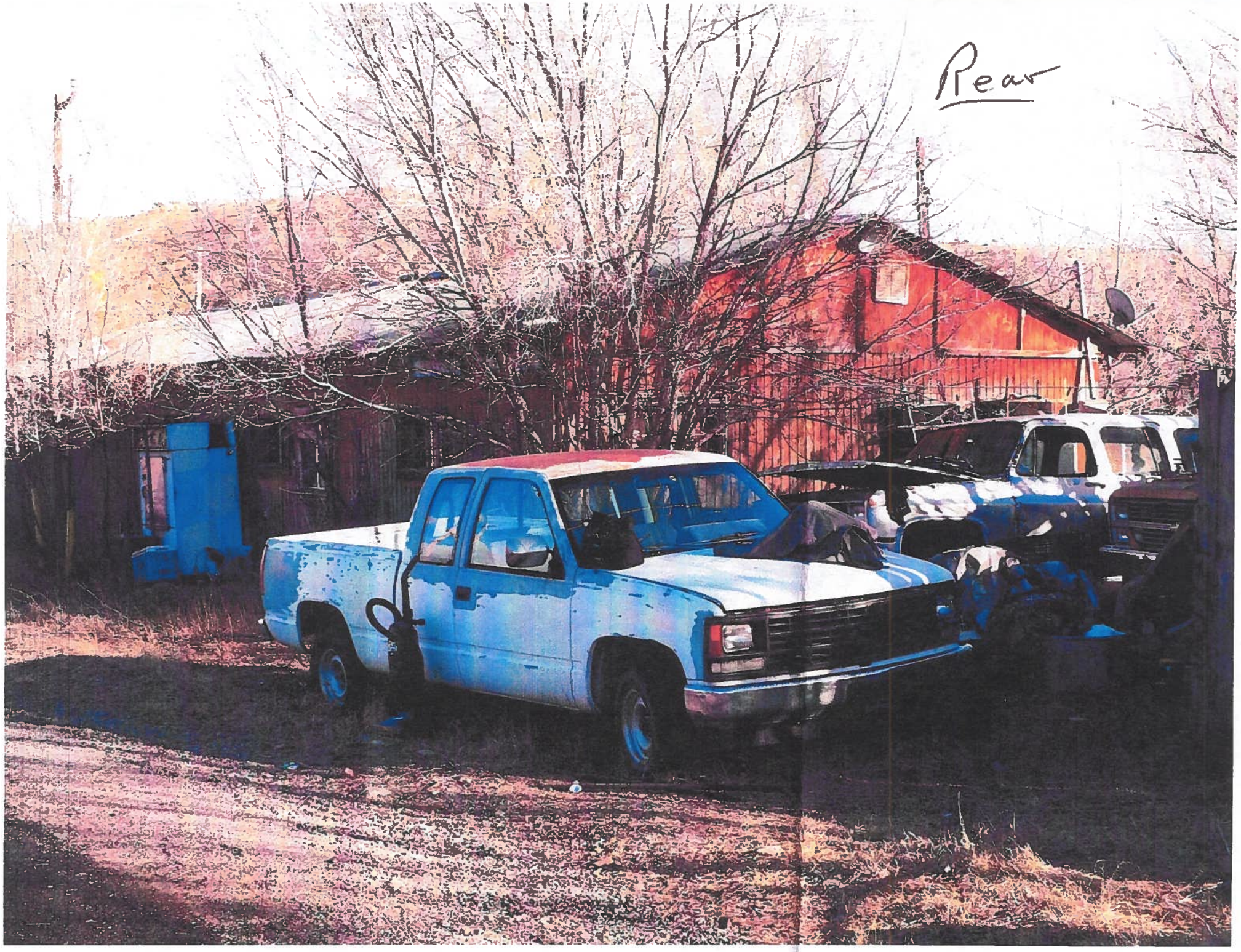
Rear

Legal Notice

Sierra County Board of Commissioners hereby give public notice that a public hearing is scheduled for **Tuesday, March 21, 2023 at 09:45 AM,** to be held in the Sierra County Commission Chambers, 1712 N. Date Street, Truth or Consequences, New Mexico 87901 for the purpose of hearing testimony regarding the Transfer of Ownership of Dispenser Liquor License 0603 in Winston, New Mexico. The Board will consider action on the Transfer of Ownership of Dispenser Liquor License 0603 in Winston, New Mexico at a regular County Commission meeting to follow the public hearing.

If you are an individual with a disability who is in need of any form of auxiliary aid, please contact the Sierra County Administrative Office at 1712 N. Date Street, Truth or Consequences, New Mexico 87901, (575) 894-6215, at least one week prior to the meeting or as soon as possible.

For additional information contact the Sierra County Administrative Office at (505) 894-6215.

Publish: _____
Amber Vaughn, County Manager

Publish	Sentinel	02/24/2023 & 03/10/2023
Post:	www.sierraco.org.	02/21/2023-03/17/2023

SIERRA COUNTY COMMISSION
REGULAR MEETING MINUTES
FEBRUARY 21, 2023

CALL TO ORDER: 10:00 am Regular Meeting

The Sierra County Board of County Commissioners met in Regular Session at 10:00 A.M. on Friday, January 6, 2023, at the Sierra County Commission Chambers, 1712 N. Date St, Truth or Consequences, New Mexico.

ROLL CALL:

Commissioner Travis Day, Chairman
Commissioner James Paxon, Vice-Chair
Commissioner Hank Hopkins, Member

Clerk of Board: Shelly K. Trujillo

County Attorney: Dave Pato

County Manager: Amber Vaughn

PLEDGE OF ALLEGIANCE:

NEW MEXICO STATE FLAG PLEDGE:

ALSO IN ATTENDANCE:

Chuck Wentworth-Sentinel, Cary Jagger Gustin, Christie Soulshy-Wilson & Co, Todd Gonzales-Wilson & Co, Ernie Armijo, Shane Atwell, Jocelyn Holguin, Virginia Lee, Ruben Lucero, Michelle Atwell, Keith Whitney, Billy Neeley, Johanna Tighe, Julianne Stroup, William G Norris, Sandra S Lucero

I. APPROVAL OF AGENDA:

Commissioner Hopkins MOVED to approve the agenda as presented. Commission Vice-Chair Paxon SECONDED the motion. Motion carried with Commissioners District 1-2-3 voting yes.

II. APPROVAL OF MINUTES:

A. Regular Meeting-January 6, 2023
B. Special Meeting-January 23, 2023

Commission Vice-Chair Paxon MOVED to approve the minutes as presented. Commissioner Hopkins SECONDED the motion. Motion carried with Commissioners District 1-2-3 voting yes.

III. PUBLIC COMMENT: LIMITED TO 3 MINUTES

IV. CONSENT AGENDA:

A. Resolution No. 110-142- Account Payables

B. Resolution No. 110-143- Budget Adjustments

C. Resolution No. 110-144- Indigent Claims

D. Indigent Burial B2023-02

E. Indigent Burial B2023-03

F. Claim of Exemption 23-002 (Garay)

Commissioner Hopkins MOVED to approve Consent Agenda as presented. Commission Vice-Chair Paxon SECONDED the motion. Motion carried with Commissioner Districts 1-2-3 voting yes.

V. PRESENTATIONS/REPORTS:

A. Years of Service award
B. Department Reports
C. Cary "Jaggar" Gustin reported there are 133 members in the Sierra County Arts Council.

VI. BOARD OF FINANCE:

A. January Reconciliation

Commission Vice-Chair Paxon MOVED to approve the January Reconciliation as presented. Commission Hopkins SECONDED the motion. Motion carried with Commissioners District 1-2-3 voting yes.

VII. OLD BUSINESS:

VIII. NEW BUSINESS:

A. Consideration of Transfer of Liquor License

Commission Vice-Chair Paxon MOVED to approve Consideration of Transfer of Liquor License as presented and to direct staff to notify.

Commissioner Hopkins SECONDED the motion. Motion carried with Commissioner Districts 1-2-3 voting yes.

B. Take Home Vehicle for Ruben Lucero-Detention

Commissioner Hopkins MOVED to approve Take Home Vehicle for Ruben Lucero-Detention as presented. Commission Vice-Chair Paxon SECONDED the motion. Motion carried with Commissioner Districts 1-2-3 voting yes.

C. Approval of 2024 SP Request for Funding

Commission Vice-Chair Paxon MOVED to approve Approval of 2024 SP Request for Funding as presented. Commissioner Hopkins SECONDED the motion. Motion carried with Commissioner Districts 1-2-3 voting yes.

D. Approval 2024 SB Request for Funding

Commission Vice-Chair Paxon MOVED to approve Approval of 2024 SB Request for Funding as presented. Commissioner Hopkins SECONDED the motion. Motion carried with Commissioner Districts 1-2-3 voting yes.

E. Approval of 2024 CAP Request for Funding

Commission Vice-Chair Paxon MOVED to approve Approval of 2024 CAP Request for Funding as presented. Commissioner Hopkins SECONDED the motion. Motion carried with Commissioner Districts 1-2-3 voting yes.

IX. CONTRACTS – AGREEMENTS – PROCUREMENT

A. Joint Powers Agreement County of Sierra, County of Sierra Sheriff and City of Elephant Butte Provision of Law Enforcement Services for City of Elephant Butte

Commissioner Hopkins MOVED to approve Joint Powers Agreement County of Sierra, County of Sierra Sheriff and City of Elephant Butte Provision of Law Enforcement Services for City of Elephant Butte as presented. Commission Vice-Chair Paxon SECONDED the motion. Motion carried with Commissioner Districts 1-2-3 voting yes.

B. State of New Mexico Department of Finance and Administration FUND 62000 Regional Centers Quality of Life Grant-Arrey Ball Field

Commission Vice-Chair Paxon MOVED to approve State of New Mexico Department of Finance and Administration FUND 62000 Regional Centers Quality of Life Grant-Arrey Ball Field as presented. Commissioner Hopkins

SECONDED the motion. Motion carried with Commissioner Districts 1-2-3 voting yes.

C. Wilson-Bridge of Grace-Task Order-To Oversee Project-CES

Commissioner Hopkins MOVED to approve Wilson-Bridge of Grace-Task Order-To Oversee Project-CES as presented. Commission Vice-Chair Paxon SECONDED the motion. Motion carried with Commissioner Districts 1-2-3 voting yes.

D. Wilson ITB-Award-Deming Excavating Inc

Commission Vice-Chair Paxon MOVED to approve Wilson ITB-Award-Deming Excavating Inc as presented. Commissioner Hopkins SECONDED the motion. Motion carried with Commissioner Districts 1-2-3 voting yes.

E. Wilson-Fair Barn-Task Order-Sierra County-On Call

Commissioner Hopkins MOVED to approve Wilson-Fair Barn-Task Order-Sierra County-On Call as presented. Commission Vice-Chair Paxon SECONDED the motion. Motion carried with Commissioner Districts 1-2-3 voting yes.

F. Highland-Change Order-Increase-Arrey Ball Field

Commission Vice-Chair Paxon MOVED to approve Highland-Change Order-Increase-Arrey Ball Field as presented. Commissioner Hopkins SECONDED the motion. Motion carried with Commissioner Districts 1-2-3 voting yes.

G. Highland-CES-Additional-Arrey Phase 2

Commissioner Hopkins MOVED to approve Highland-CES-Additional-Arrey Phase 2 as presented. Commission Vice-Chair Paxon SECONDED the motion. Motion carried with Commissioner Districts 1-2-3 voting yes.

H. Highland-Award-RFP #2022-12-017-Hillsboro Project Phase 2

Commission Vice-Chair Paxon MOVED to approve Highland-Award-RFP #2022-12-017-Hillsboro Project Phase 2 as presented. Commissioner Hopkins SECONDED the motion. Motion carried with Commissioner Districts 1-2-3 voting yes.

I. Flood Amendment 1-NM33-Consulting-Extend Term

Commission Vice-Chair Paxon MOVED to approve Flood Amendment 1-NM33-Consulting-Extend Term as presented. Commissioner Hopkins SECONDED the motion. Motion carried with Commissioner Districts 1-2-3 voting yes.

J. Lonestar-Capital Purchase-Road Department

Commissioner Hopkins MOVED to approve Lonestar-Capital Purchase-Road Department as presented. Commission Vice-Chair Paxon SECONDED the motion. Motion carried with Commissioner Districts 1-2-3 voting yes.

X. RESOLUTIONS – ORDINANCES – PROCLAMATIONS

A. Resolution No. 110-145-Fee for Addressing and Road Name Change

Commissioner Hopkins MOVED to approve Resolution No. 110-145-Fee for Addressing and Road Name Change as presented. Commission Vice-Chair Paxon SECONDED the motion. Motion carried with Commissioner Districts 1-2-3 voting yes.

B. Resolution No. 110-146-Appointment of County Board of Registration

Commission Vice-Chair Paxon MOVED to approve Resolution No. 110-146-Appointment of County Board of Registration as presented. Commissioner Hopkins SECONDED the motion. Motion carried with Commissioner Districts 1-2-3 voting yes.

C. Resolution No. 110-147-Authorizing the County to Submit an Application to the Department of Finance and Administration, Local Government Division to Participate in the Local DWI Grant and Distribution Program

Commission Vice-Chair Paxon MOVED to approve Resolution No. 110-147-Authorizing the County to Submit an Application to the Department of Finance and Administration, Local Government Division to Participate in the Local DWI Grant and Distribution Program as presented. Commissioner Hopkins SECONDED the motion. Motion carried with Commissioner Districts 1-2-3 voting yes.

XI. EXECUTIVE SESSION SECTION (10-15-E THRU H):

Commission Vice-Chair Paxon MOVED to go into Executive Session for Personnel, Real Estate, Pending and Threatened Litigation. Commissioner Hopkins SECONDED the motion. Roll call vote was taken with all Commissioners present voting yes.

District 1 – Yes

District 2 – Yes
District 3 – Yes

PENDING AND THREATENED LITIGATION:

PERSONNEL:

REAL ESTATE: Disposal of 855 Van Patten-County Building

DISPOSAL OF REAL PROPERTY

XII. OPEN SESSION ACTIONS FOR EXECUTIVE SESSION:

Commission Vice-Chair Paxon MOVED to come back into Regular Session. Commissioner Hopkins SECONDED the motion. Roll call vote was taken, with all Commissioners present voting yes.

DATE AND TIME OF NEXT REGULAR SIERRA COUNTY COMMISSION MEETING:

The date and time of the next Regular Sierra County Commission Meeting has been scheduled for Tuesday, March 21, 2023 at 10:00 A.M. at the Sierra County Commission Chamber at 1712 N. Date St. Truth or Consequences, New Mexico.

Commissioner Hopkins MOVED to adjourn the meeting. Commission Vice-Chair Paxon SECONDED the motion.

ADJOURNMENT:

There being no further business to come before the Board, Commission Chair Day adjourned the meeting.

Dated this 21st day of February, 2023.

SIERRA COUNTY BOARD OF COUNTY COMMISSIONERS

_____
Commissioner Travis Day, Chairman

_____
Commissioner James E Paxon, Vice-Chairman

_____
Commissioner Hank Hopkins, Member

ATTEST:

_____
Shelly K Trujillo, County Clerk

State of New Mexico

Shelly Trujillo
County Clerk
575-894-2840

Candace Chavez
County Treasurer
575-894-3524

Michael D. Huston
County Assessor
575-894-2589

Tom Pestak
Probate Judge
575-894-2840

SIERRA COUNTY
NEW MEXICO

1712 N. Date St.
Truth or Consequences, New Mexico 87901

Amber Vaughn, County Manager
575-894-6215 voice 575-894-9548 fax

County of Sierra

James E. Paxon
District 1
575-894-6215

Travis Day
District 2
575-894-6215

Hank Hopkins
District 3
575-894-6215

Glenn Hamilton
County Sheriff
575-894-9150

RESOLUTION NO. 110-148
ACCOUNTS PAYABLE
A RESOLUTION APPROVING THE PAYMENT OF CLAIMS THROUGH THE PERIOD BEGINNING FEBRUARY 1, 2023
AND
ENDING FEBRUARY 28, 2023

WHEREAS, THE BOARD OF COUNTY COMMISSIONERS OF SIERRA COUNTY, NEW MEXICO, MEETING IN REGULAR PUBLIC SESSION ON MARCH 21, 2023 DESIRES TO PROVIDE FOR THE EQUITABLE AND REASONABLE PAYENT OF CLAIMS DUE AND ACCOUNTS PAYABLE, AND;

THEREFORE, BE IT RESOLVED, THAT CLAIMS, PURCHASE VOUCHERS AND WARRANTS DETAILED AND ATTACHED HERETO, PAYABLE FROM THE VARIOUS FUNDS, IN THE AMOUNT OF **$1,154,542.81** ARE PASSED, APPROVED AND ADOPTED ON THIS 21ST DAY OF MARCH, 2023.

BOARD OF COUNTY COMMISSIONERS
SIERRA COUNTY, NEW MEXICO

ATTEST:

TRAVIS DAY, COMMISSIONER

HANK HOPKINS COMMISSIONER

SHELLY K. TRUJILLO, COUNTY CLERK

JAMES PAXON, COMMISSIONER

Date: 3/15/23 9:05:13 D I S T R I B U T I O N RESOLUTION NO.110-148

		DEBITS	CREDITS
** GRAND TOTAL **		1,154,542.81	.00
**TOTAL	GENERAL	415,544.43	.00
**DEPT	COMMISSIONERS	53,602.29	.00
401-00-2001	ELECTED OFFICIAL'S SALARY	4,969.38	.00
401-00-2007	FICA MATCH-7.65%	379.60	.00
401-00-2108	LODGING	1,005.52	.00
401-00-2221	TELEPHONE/MAINTENANCE/UPGRADE	1,012.65	.00
401-00-2232	SAFETY EQUIPMENT	119.00	.00
401-00-2333	COMPUTER DATA/INTERNET	19,619.54	.00
401-00-2660	GROUP INSURANCE MATCH 90%	73.98	.00
401-00-2662	RETIREE INSURANCE	9,447.23	.00
401-00-2770	AUDIT	7,219.25	.00
401-00-2771	PROFESSIONAL/LEGAL SERVICES	9,656.04	.00
401-00-2772	EMPLOYMENT MED. REQUIREMENTS	100.00	.00
**DEPT	ADMINISTRATION	44,111.69	.00
401-01-2002	FULL-TIME SALARIES	28,468.80	.00
401-01-2006	PERA MATCH 10.30%	2,932.30	.00
401-01-2007	FICA MATCH-7.65%	2,077.78	.00
401-01-2108	LODGING	1,131.21	.00
401-01-2110	PER DIEM	140.22	.00
401-01-2112	MEMBERSHIP FEES	50.00	.00
401-01-2220	POSTAGE	821.42	.00
401-01-2221	TELEPHONE/MAINTENANCE/UPGRADE	273.30	.00
401-01-2222	PRINTING & PUBLISHING	132.02	.00
401-01-2225	SUPPLIES	1,242.40	.00
401-01-2333	COMPUTER DATA/INTERNET	53.56	.00
401-01-2441	FUEL	104.60	.00
401-01-2660	GROUP INSURANCE MATCH 90%	5,772.73	.00
401-01-2662	RETIREE INSURANCE	569.40	.00
401-01-2898	EQUIPMENT LEASE	341.95	.00
**DEPT	FACILITIES MANAGEMENT	24,292.00	.00
401-02-2002	FULL-TIME SALARIES	8,568.00	.00
401-02-2006	PERA MATCH 10.30%	882.50	.00
401-02-2007	FICA MATCH-7.65%	642.98	.00
401-02-2106	CONTRACT SERVICES	1,584.00	.00
401-02-2221	TELEPHONE/MAINTENANCE/UPGRADE	314.12	.00
401-02-2225	SUPPLIES	61.90	.00
401-02-2333	COMPUTER DATA/INTERNET	54.19	.00
401-02-2441	FUEL	191.23	.00
401-02-2550	BUILDING REPAIRS/MAINTENANCE	624.07	.00
401-02-2552	UTILITIES	10,560.39	.00
401-02-2660	GROUP INSURANCE MATCH 90%	637.26	.00
401-02-2662	RETIREE INSURANCE	171.36	.00
**DEPT	OFFICE OF COUNTY CLERK	27,202.09	.00
401-04-2001	ELECTED OFFICIAL'S SALARY	4,988.80	.00
401-04-2002	FULL-TIME SALARIES	11,601.61	.00
401-04-2006	PERA MATCH 10.30%	1,708.82	.00
401-04-2007	FICA MATCH-7.65%	1,234.54	.00
401-04-2108	LODGING	754.14	.00
401-04-2110	PER DIEM	273.79	.00
401-04-2220	POSTAGE	111.36	.00
401-04-2221	TELEPHONE/MAINTENANCE/UPGRADE	140.78	.00
401-04-2225	SUPPLIES	791.87	.00
401-04-2333	COMPUTER DATA/INTERNET	53.56	.00

Date: 3/15/23 9:05:13 D I S T R I B U T I O N RESOLUTION NO.110-148

		DEBITS	CREDITS
401-04-2441	FUEL	273.46	.00
401-04-2660	GROUP INSURANCE MATCH 90%	4,937.54	.00
401-04-2662	RETIREE INSURANCE	331.82	.00
**			
**DEPT	BUREAU OF ELECTIONS	362.16	.00
401-05-2111	OTHER ELECTION EXPENSE	28.57	.00
401-05-2220	POSTAGE	92.37	.00
401-05-2221	TELEPHONE/MAINTENANCE/UPGRADE	241.22	.00
**			
**DEPT	PROPERTY ASSESSMENTS	36,846.04	.00
401-06-2001	ELECTED OFFICIAL'S SALARY	5,198.40	.00
401-06-2002	FULL-TIME SALARIES	15,455.54	.00
401-06-2006	PERA MATCH 10.30%	2,066.63	.00
401-06-2007	FICA MATCH-7.65%	1,536.61	.00
401-06-2220	POSTAGE	7,351.28	.00
401-06-2333	COMPUTER DATA/INTERNET	53.56	.00
401-06-2660	GROUP INSURANCE MATCH 90%	4,397.79	.00
401-06-2662	RETIREE INSURANCE	401.27	.00
401-06-2898	EQUIPMENT LEASE	384.96	.00
**			
**DEPT	TREASURERS	25,623.19	.00
401-07-2001	ELECTED OFFICIAL'S SALARY	4,988.80	.00
401-07-2002	FULL-TIME SALARIES	10,352.96	.00
401-07-2006	PERA MATCH 10.30%	934.74	.00
401-07-2007	FICA MATCH-7.65%	1,097.00	.00
401-07-2108	LODGING	879.83	.00
401-07-2110	PER DIEM	171.96	.00
401-07-2220	POSTAGE	103.53	.00
401-07-2225	SUPPLIES	1,112.00	.00
401-07-2333	COMPUTER DATA/INTERNET	134.84	.00
401-07-2441	FUEL	129.38	.00
401-07-2660	GROUP INSURANCE MATCH 90%	5,293.10	.00
401-07-2662	RETIREE INSURANCE	181.52	.00
401-07-2898	EQUIPMENT LEASE	243.45	.00
**			
**DEPT	LAW ENFORCEMENT	149,301.65	.00
401-08-2001	ELECTED OFFICIAL'S SALARY	5,448.00	.00
401-08-2002	FULL-TIME SALARIES	45,002.38	.00
401-08-2005	OVERTIME PAY	2,108.87	.00
401-08-2006	PERA MATCH 10.30%	931.78	.00
401-08-2007	FICA MATCH-7.65%	3,970.27	.00
401-08-2040	LE PERA MATCH 19.65%	8,061.15	.00
401-08-2108	LODGING	47.66	.00
401-08-2110	PER DIEM	60.45	.00
401-08-2116	UNIFORM ALLOWANCE	260.87	.00
401-08-2220	POSTAGE	9.81	.00
401-08-2221	TELEPHONE/MAINTENANCE/UPGRADE	895.90	.00
401-08-2222	PRINTING & PUBLISHING	175.23	.00
401-08-2225	SUPPLIES	328.42	.00
401-08-2333	COMPUTER DATA/INTERNET	80.00	.00
401-08-2441	FUEL	4,912.58	.00
401-08-2660	GROUP INSURANCE MATCH 90%	14,128.77	.00
401-08-2662	RETIREE INSURANCE	1,206.54	.00
401-08-2883	MEDICAL/DENTAL COSTS-INMATES	429.22	.00
401-08-2887	CIVIL LIABILITY/TRAINING/EQUIP	300.00	.00
401-08-2898	EQUIPMENT LEASE	201.85	.00
401-08-2900	CAPITAL OUTLAY	60,741.90	.00
**			
**DEPT	DETENTION	52,124.40	.00
401-09-2002	FULL-TIME SALARIES	29,976.97	.00

Date: 3/15/23 9:05:13 D I S T R I B U T I O N RESOLUTION NO.110-148

		DEBITS	CREDITS
401-09-2004	PART-TIME SALARIES	2,550.40	.00
401-09-2005	OVERTIME PAY	1,376.99	.00
401-09-2006	PERA MATCH 10.30%	1,271.98	.00
401-09-2007	FICA MATCH-7.65%	2,527.46	.00
401-09-2110	PER DIEM	81.08	.00
401-09-2115	REGISTRATION FEES	251.38	.00
401-09-2221	TELEPHONE/MAINTENANCE/UPGRADE	733.07	.00
401-09-2225	SUPPLIES	1,425.00	.00
401-09-2441	FUEL	1,770.79	.00
401-09-2660	GROUP INSURANCE MATCH 90%	7,098.94	.00
401-09-2662	RETIREE INSURANCE	635.37	.00
401-09-2898	EQUIPMENT LEASE	424.97	.00
**DEPT	PROBATE JUDGE	2,078.92	.00
401-15-2001	ELECTED OFFICIAL'S SALARY	1,392.54	.00
401-15-2007	FICA MATCH-7.65%	106.52	.00
401-15-2108	LODGING	251.38	.00
401-15-2109	TRAVEL/MILEAGE	136.80	.00
401-15-2110	PER DIEM	79.22	.00
401-15-2221	TELEPHONE/MAINTENANCE/UPGRADE	108.04	.00
401-15-2660	GROUP INSURANCE MATCH 90%	4.42	.00
**TOTAL	ROAD DEPARTMENT	76,017.42	.00
**DEPT	ROAD	76,017.42	.00
402-50-2002	FULL-TIME SALARIES	29,360.56	.00
402-50-2006	PERA MATCH 10.30%	3,024.12	.00
402-50-2007	FICA MATCH-7.65%	2,143.86	.00
402-50-2108	LODGING	918.22	.00
402-50-2114	CONVENTIONS/SCHOOLS	300.00	.00
402-50-2220	POSTAGE	1.44	.00
402-50-2221	TELEPHONE/MAINTENANCE/UPGRADE	246.85	.00
402-50-2225	SUPPLIES	383.85	.00
402-50-2232	SAFETY EQUIPMENT	226.26	.00
402-50-2330	EQUIPMENT/VEHICLE MAINTENANCE	1,340.59	.00
402-50-2333	COMPUTER DATA/INTERNET	70.44	.00
402-50-2441	FUEL	6,498.59	.00
402-50-2442	OIL/LUBE	1,654.40	.00
402-50-2443	TIRES/TUBES	80.77	.00
402-50-2660	GROUP INSURANCE MATCH 90%	8,012.89	.00
402-50-2662	RETIREE INSURANCE	587.18	.00
402-50-2891	ROAD MAINTENANCE	1,018.36	.00
402-50-2898	EQUIPMENT LEASE	169.48	.00
402-50-2899	EQUIPMENT PAYMENT	19,979.56	.00
**TOTAL	WHITE SANDS MISSLE RANGE	1,982.15	.00
**DEPT	WHITE SANDS MISSLE RANGE	1,982.15	.00
404-65-2002	FULL-TIME SALARIES	1,826.66	.00
404-65-2007	FICA MATCH-7.65%	155.49	.00
**TOTAL	LANDFILL	6,688.54	.00
**DEPT	LANDFILL	6,688.54	.00
405-67-2002	FULL-TIME SALARIES	1,346.16	.00
405-67-2004	PART-TIME SALARIES	1,870.56	.00
405-67-2006	PERA MATCH 10.30%	138.67	.00
405-67-2007	FICA MATCH-7.65%	241.00	.00
405-67-2080	CITY OF T OR C	867.51	.00
405-67-2225	SUPPLIES	237.40	.00

Date: 3/15/23 9:05:13 D I S T R I B U T I O N RESOLUTION NO.110-148

		DEBITS	CREDITS
405-67-2335	PORTABLE SANITARY SERVICES	779.73	.00
405-67-2441	FUEL	641.92	.00
405-67-2552	UTILITIES	117.33	.00
405-67-2660	GROUP INSURANCE MATCH 80%	324.93	.00
405-67-2662	RETIREE INSURANCE	26.93	.00
405-67-2925	ENVIRONMENTAL ENGINEERING	96.40	.00
**TOTAL	COUNTY INDIGENT	8,380.43	.00
**DEPT	COUNTY INDIGENT CLAIMS	8,380.43	.00
406-70-2668	INDIGENT BURIAL	1,200.00	.00
406-70-2873	INDIGENT HOSPITAL CLAIMS	7,180.43	.00
**TOTAL	HILLSBORO FIRE DEPT.	4,835.61	.00
**DEPT	HILLSBORO FIRE	4,835.61	.00
407-75-2221	TELEPHONE/MAINTENANCE/UPGRADE	99.33	.00
407-75-2330	EQUIPMENT/VEHICLE MAINTENANCE	996.90	.00
407-75-2550	BUILDING REPAIRS/MAINTENANCE	117.49	.00
407-75-2552	UTILITIES	1,088.79	.00
407-75-2999	CAPITAL UNDER $5,000	2,533.10	.00
**TOTAL	ARREY/DERRY FIRE DEPT.	26,326.32	.00
**DEPT	ARREY/DERRY FIRE	26,326.32	.00
409-77-2221	TELEPHONE/MAINTENANCE/UPGRADE	187.98	.00
409-77-2330	EQUIPMENT/VEHICLE MAINTENANCE	1,810.45	.00
409-77-2441	FUEL	105.32	.00
409-77-2550	BUILDING REPAIRS/MAINTENANCE	58.74	.00
409-77-2552	UTILITIES	947.91	.00
409-77-2999	CAPITAL UNDER $5,000	23,215.92	.00
**TOTAL	WINSTON FIRE DEPARTMENT	4,863.59	.00
**DEPT	WINSTON	4,863.59	.00
410-74-2330	EQUIPMENT/VEHICLE MAINTENANCE	4,141.35	.00
410-74-2441	FUEL	69.00	.00
410-74-2550	BUILDING REPAIRS/MAINTENANCE	136.51	.00
410-74-2552	UTILITIES	516.73	.00
**TOTAL	MONTICELLO FIRE DEPARTMENT	3,988.29	.00
**DEPT	MONTICELLO FIRE	3,988.29	.00
411-78-2221	TELEPHONE/MAINTENANCE/UPGRADE	146.22	.00
411-78-2330	EQUIPMENT/VEHICLE MAINTENANCE	2,558.90	.00
411-78-2441	FUEL	152.00	.00
411-78-2550	BUILDING REPAIRS/MAINTENANCE	86.13	.00
411-78-2552	UTILITIES	1,045.04	.00
**TOTAL	CABALLO FIRE DEPARTMENT	3,229.40	.00
**DEPT	CABALLO FIRE	3,229.40	.00
413-80-2221	TELEPHONE/MAINTENANCE/UPGRADE	116.49	.00
413-80-2330	EQUIPMENT/VEHICLE MAINTENANCE	2,316.63	.00
413-80-2441	FUEL	121.03	.00
413-80-2550	BUILDING REPAIRS/MAINTENANCE	52.34	.00
413-80-2552	UTILITIES	232.94	.00
413-80-2999	CAPITAL UNDER $5,000	389.97	.00
**TOTAL	LAS PALOMAS FIRE DEPT	1,166.56	.00

Date: 3/15/23 9:05:13 D I S T R I B U T I O N RESOLUTION NO 110-148

		DEBITS	CREDITS
**DEPT	LAS PALOMAS FIRE	1,166.56	.00
414-83-2221	TELEPHONE/MAINTENANCE/UPGRADE	211.86	.00
414-83-2441	FUEL	89.46	.00
414-83-2550	BUILDING REPAIRS/MAINTENANCE	49.13	.00
414-83-2552	UTILITIES	78.31	.00
414-83-2999	CAPITAL UNDER $5,000	737.80	.00
**TOTAL	COMMUNITY PROJECTS	3,150.00	.00
**DEPT	COMMUNITY PROJECTS	3,150.00	.00
419-13-2902	SIERRA ANIMAL SHELTER	3,000.00	.00
419-13-2903	ANIMAL CONTROL CALLS	150.00	.00
**TOTAL	REAPPRAISAL FUND	14,223.54	.00
**DEPT	REAPPRAISAL FUND	14,223.54	.00
422-66-2002	FULL-TIME SALARIES	3,414.77	.00
422-66-2006	PERA MATCH 10.30%	328.27	.00
422-66-2007	FICA MATCH-7.65%	261.23	.00
422-66-2225	SUPPLIES	118.08	.00
422-66-2441	FUEL	138.44	.00
422-66-2660	GROUP INSURANCE MATCH 90%	699.01	.00
422-66-2662	RETIREE INSURANCE	63.74	.00
422-66-2999	CAPITAL UNDER $5,000	9,200.00	.00
**TOTAL	POVERTY CREEK FIRE DEPARTMENT	498.69	.00
**DEPT	POVERTY CREEK FIRE	498.69	.00
425-59-2221	TELEPHONE/MAINTENANCE/UPGRADE	75.20	.00
425-59-2550	BUILDING REPAIRS/MAINTENANCE	80.11	.00
425-59-2552	UTILITIES	343.38	.00
**TOTAL	SIERRA ADMIN. FIRE	2,857.52	.00
**DEPT	FIRE ADMINISTRATOR	2,857.52	.00
426-45-2108	LODGING	377.07	.00
426-45-2110	PER DIEM	72.83	.00
426-45-2221	TELEPHONE/MAINTENANCE/UPGRADE	40.01	.00
426-45-2333	COMPUTER DATA/INTERNET	53.55	.00
426-45-2441	FUEL	342.18	.00
426-45-2999	CAPITAL UNDER $5,000	1,971.88	.00
**TOTAL	GRANT PROJECTS	126,159.39	.00
**DEPT	COMMISSIONERS	57,189.49	.00
500-00-2091	ARPA BROADBAND	57,189.49	.00
**DEPT	LAW ENFORCEMENT	1,292.04	.00
500-08-2005	OVERTIME PAY	1,292.04	.00
**DEPT	BHIZ GRANT	18,551.61	.00
500-46-2106	CONTRACT SERVICES	18,551.61	.00
**DEPT	LEAD GRANT	2,695.00	.00
500-47-2106	CONTRACT SERVICES	2,695.00	.00
**DEPT	RISE GRANT	19,974.99	.00
500-48-2002	FULL-TIME SALARIES	2,588.89	.00
500-48-2006	PERA MATCH 10.30%	266.65	.00

Date: 3/15/23 9:05:13 D I S T R I B U T I O N RESOLUTION NO.110-148

		DEBITS	CREDITS
500-48-2007	FICA MATCH-7.65%	198.06	.00
500-48-2106	CONTRACT SERVICES	15,598.57	.00
500-48-2330	EQUIPMENT/VEHICLE MAINTENANCE	109.05	.00
500-48-2660	GROUP INSURANCE MATCH 90%	1,162.00	.00
500-48-2662	RETIREE INSURANCE	51.77	.00
**DEPT	COSSAP FEDERAL GRANT	10,572.45	.00
500-49-2002	FULL-TIME SALARIES	2,654.38	.00
500-49-2006	PERA MATCH 10.30%	272.61	.00
500-49-2007	FICA MATCH-7.65%	203.06	.00
500-49-2106	CONTRACT SERVICES	5,578.61	.00
500-49-2221	TELEPHONE/MAINTENANCE/UPGRADE	40.94	.00
500-49-2225	SUPPLIES	277.92	.00
500-49-2660	GROUP INSURANCE MATCH 90%	5.66	.00
500-49-2662	RETIREE INSURANCE	52.94	.00
500-49-2898	EQUIPMENT LEASE	1,486.33	.00
**DEPT	ROAD	15,883.81	.00
500-50-2745	SUGAR SAND BRIDGE	15,883.81	.00
**TOTAL	LEGISLATIVE APPROPRIATIONS	158,261.95	.00
**DEPT	CAPITAL PROJECTS	158,261.95	.00
502-56-2978	LEG. APPROP-ARREY BASEBALL FIELD	152,684.41	.00
502-56-2982	LEG. APPROP-BRIDGE OF GRACE	5,577.54	.00
**TOTAL	ELECTRONIC MONITORING	2,049.13	.00
**DEPT	ELECTRONIC MONITORING	2,049.13	.00
507-29-2032	CONTRACTS	2,049.13	.00
**TOTAL	DWI PROGRAM FEES	705.47	.00
**DEPT	DWI PROGRAM FEES FUND	705.47	.00
508-39-2002	FULL-TIME SALARIES	587.20	.00
508-39-2006	PERA MATCH 10.30%	60.49	.00
508-39-2007	FICA MATCH-7.65%	44.94	.00
508-39-2660	GROUP INSURANCE MATCH 90%	1.11	.00
508-39-2662	RETIREE INSURANCE	11.74	.00
**TOTAL	DWI DISTRIBUTION	3,726.24	.00
**DEPT	DWI DISTRIBUTION FUND	3,726.24	.00
509-38-2002	FULL-TIME SALARIES	2,528.00	.00
509-38-2006	PERA MATCH 10.30%	260.38	.00
509-38-2007	FICA MATCH-7.65%	193.40	.00
509-38-2221	TELEPHONE/MAINTENANCE/UPGRADE	140.60	.00
509-38-2225	SUPPLIES	17.00	.00
509-38-2333	COMPUTER DATA/INTERNET	53.55	.00
509-38-2660	GROUP INSURANCE MATCH 90%	4.42	.00
509-38-2662	RETIREE INSURANCE	50.56	.00
509-38-2898	EQUIPMENT LEASE	478.33	.00
**TOTAL	DWI GRANT	5,227.40	.00
**DEPT	DWI GRANT FUND	5,227.40	.00
510-37-2002	FULL-TIME SALARIES	3,932.80	.00
510-37-2006	PERA MATCH 10.30%	405.08	.00
510-37-2007	FICA MATCH-7.65%	287.16	.00
510-37-2660	GROUP INSURANCE MATCH 90%	523.70	.00

		DEBITS	CREDITS
510-37-2662	RETIREE INSURANCE	78.66	.00
**TOTAL	LAW ENFORCEMENT PROTECTION	73,654.66	.00
**DEPT	LAW ENFORCEMENT PROTECTION	73,654.66	.00
604-85-2007	FICA MATCH-7.65%	4,172.56	.00
604-85-2021	EQUIPMENT AND TRAINING	14,938.10	.00
604-85-2093	LE RETENTION STIPEND	54,544.00	.00
**TOTAL	CORRECTION FEE FUND	122,567.95	.00
**DEPT	CORRECTION FEES	122,567.95	.00
605-86-2800	JUVENILE FEES	6,200.00	.00
605-86-2888	PRISONER MEALS	49.07	.00
605-86-2889	PRISONER HOUSING OUTSIDE COUNTY	116,318.88	.00
**TOTAL	HILLSBORO EMS	184.07	.00
**DEPT	HILLSBORO EMS	184.07	.00
611-89-2225	SUPPLIES	184.07	.00
**TOTAL	CLERK EQUIP RECORDING FEE	174.67	.00
**DEPT	RECORDING AND FILING	174.67	.00
624-87-2898	EQUIPMENT LEASE	174.67	.00
**TOTAL	SIERRA COUNTY FLOOD COMMISSION	7,525.91	.00
**DEPT	FLOOD DAMAGE REPAIR	7,525.91	.00
627-26-2109	TRAVEL/MILEAGE	190.00	.00
627-26-2333	COMPUTER DATA/INTERNET	835.91	.00
627-26-2771	PROFESSIONAL/LEGAL SERVICES	6,500.00	.00
**TOTAL	EMERGENCY MANAGEMENT SERVICES	13,022.62	.00
**DEPT	EMERGENCY MGMT SERVICES	13,022.62	.00
629-03-2002	FULL-TIME SALARIES	9,672.00	.00
629-03-2006	PERA MATCH 10.30%	996.22	.00
629-03-2007	FICA MATCH-7.65%	728.64	.00
629-03-2441	FUEL	97.46	.00
629-03-2660	GROUP INSURANCE MATCH 90%	1,334.86	.00
629-03-2662	RETIREE INSURANCE	193.44	.00
**TOTAL	LAS PALOMAS EMS	861.43	.00
**DEPT	LAS PALOMAS EMS	861.43	.00
633-44-2115	REGISTRATION FEES	90.00	.00
633-44-2330	EQUIPMENT/VEHICLE MAINTENANCE	771.43	.00
**TOTAL	SIERRA COUNTY REGIONAL DISPATCH	63,304.03	.00
**DEPT	DISPATCH	63,304.03	.00
634-32-2002	FULL-TIME SALARIES	37,902.52	.00
634-32-2005	OVERTIME PAY	3,765.96	.00
634-32-2006	PERA MATCH 10.30%	3,750.76	.00
634-32-2007	FICA MATCH-7.65%	3,091.74	.00
634-32-2035	TRAINING	862.00	.00
634-32-2108	LODGING	502.76	.00
634-32-2110	PER DIEM	146.64	.00
634-32-2220	POSTAGE	6.33	.00

Date: 3/15/23 9:05:13 D I S T R I B U T I O N RESOLUTION NO.110-148

		DEBITS	CREDITS
634-32-2221	TELEPHONE/MAINTENANCE/UPGRADE	1,098.69	.00
634-32-2222	PRINTING & PUBLISHING	94.94	.00
634-32-2225	SUPPLIES	218.98	.00
634-32-2441	FUEL	90.73	.00
634-32-2552	UTILITIES	63.00	.00
634-32-2660	GROUP INSURANCE MATCH 90%	10,717.82	.00
634-32-2662	RETIREE INSURANCE	728.31	.00
634-32-2898	EQUIPMENT LEASE	262.85	.00
**TOTAL	TREASURER'S FEES	3,365.40	.00
**DEPT	TREASURER'S FEES	3,365.40	.00
635-33-2114	CONVENTIONS/SCHOOLS	150.00	.00
635-33-2999	CAPITAL UNDER $5,000	3,215.40	.00
BANK00	DIRECT DEPOSIT	227,712.06	.00
BANK02	CITIZENS BANK	3,185.34	.00
BANK03	CITIZENS BANK	923,645.41	.00
	** BANK TOTALS **	1,154,542.81	.00

CK#	DATE	Name	Description	Line Item	Invoice #	DATE	PO #	Amount
DD E029081		HOLGUIN, JOCELYN	PYRL FM-01/15/2023 TO-01/28/2023	401-01-2002		/ /		1134.58
1134.58								
02/02/2023								
ADMINISTRATION	1134.58							
DD E029082		MENA, REBECCA L	PYRL FM-01/15/2023 TO-01/28/2023	401-01-2002		/ /		1166.91
1166.91								
02/02/2023								
ADMINISTRATION	1166.91							
DD E029083		MIRANDA, DORA	PYRL FM-01/15/2023 TO-01/28/2023	401-01-2002		/ /		639.81
799.78			PYRL FM-01/15/2023 TO-01/28/2023	401-01-2002		/ /		79.96
02/02/2023			PYRL FM-01/15/2023 TO-01/28/2023	401-01-2002		/ /		80.01
ADMINISTRATION	799.78							
DD E029084		VAUGHN, AMBER	PYRL FM-01/15/2023 TO-01/28/2023	401-01-2002		/ /		2812.38
2812.38								
02/02/2023								
ADMINISTRATION	2812.38							
DD E029085		WHITNEY, KEITH WESLEY	PYRL FM-01/15/2023 TO-01/28/2023	401-01-2002		/ /		618.87
618.87								
02/02/2023								
ADMINISTRATION	618.87							
DD E029086		ENGLE, LARITA M	PYRL FM-01/15/2023 TO-01/28/2023	401-01-2002		/ /		619.10
630.94			PYRL FM-01/15/2023 TO-01/28/2023	401-01-2002		/ /		11.84
02/02/2023								
ADMINISTRATION	630.94							
DD E029087		BARDOLIWALA, JINAL V	PYRL FM-01/15/2023 TO-01/28/2023	401-06-2002		/ /		820.58
839.32			PYRL FM-01/15/2023 TO-01/28/2023	401-06-2002		/ /		18.74
02/02/2023								
PROPERTY ASSESSMENTS	839.32							
DD E029088		BARNES, CHEALSEY D	PYRL FM-01/15/2023 TO-01/28/2023	422-66-2002		/ /		16.55
844.53			PYRL FM-01/15/2023 TO-01/28/2023	401-06-2002		/ /		24.82
02/02/2023			PYRL FM-01/15/2023 TO-01/28/2023	401-06-2002		/ /		420.63
			PYRL FM-01/15/2023 TO-01/28/2023	422-66-2002		/ /		282.13
			PYRL FM-01/15/2023 TO-01/28/2023	422-66-2002		/ /		10.05
			PYRL FM-01/15/2023 TO-01/28/2023	401-06-2002		/ /		10.05
			PYRL FM-01/15/2023 TO-01/28/2023	401-06-2002		/ /		48.16
			PYRL FM-01/15/2023 TO-01/28/2023	422-66-2002		/ /		32.14
REAPPRAISAL FUND	340.87	PROPERTY ASSESSMENTS	503.66					
DD E029089		COULTER, ASHLEIGH A	PYRL FM-01/15/2023 TO-01/28/2023	401-06-2002		/ /		1599.86
1599.86								
02/02/2023								
PROPERTY ASSESSMENTS	1599.86							

CK#	DATE	Name	Description	Line Item	Invoice #	DATE	PO #	Amount
DD R029090		HUSTON, MICHAEL D	PYRL FM-01/15/2023 TO-01/28/2023	401-06-2001		/ /		1668.25
1668.25								
02/02/2023								
PROPERTY ASSESSMENTS 1668.25								
DD R029091		MILLER, TAMARA MOORE	PYRL FM-01/15/2023 TO-01/28/2023	401-06-2002		/ /		687.70
864.15			PYRL FM-01/15/2023 TO-01/28/2023	401-06-2002		/ /		18.11
02/02/2023			PYRL FM-01/15/2023 TO-01/28/2023	401-06-2002		/ /		140.24
			PYRL FM-01/15/2023 TO-01/28/2023	401-06-2002		/ /		18.10
PROPERTY ASSESSMENTS 864.15								
DD R029092		MONTENEGRO, ERNESTINA	PYRL FM-01/15/2023 TO-01/28/2023	401-06-2002		/ /		47.34
1103.44			PYRL FM-01/15/2023 TO-01/28/2023	422-66-2002		/ /		31.54
02/02/2023			PYRL FM-01/15/2023 TO-01/28/2023	401-06-2002		/ /		541.20
			PYRL FM-01/15/2023 TO-01/28/2023	422-66-2002		/ /		356.51
			PYRL FM-01/15/2023 TO-01/28/2023	401-06-2002		/ /		12.03
			PYRL FM-01/15/2023 TO-01/28/2023	422-66-2002		/ /		12.22
			PYRL FM-01/15/2023 TO-01/28/2023	401-06-2002		/ /		61.55
			PYRL FM-01/15/2023 TO-01/28/2023	422-66-2002		/ /		41.05
PROPERTY ASSESSMENTS 662.12 REAPPRAISAL FUND 441.32								
DD R029093		SCOTT, JULIE ANN	PYRL FM-01/15/2023 TO-01/28/2023	401-06-2002		/ /		604.60
744.10			PYRL FM-01/15/2023 TO-01/28/2023	401-06-2002		/ /		18.60
02/02/2023			PYRL FM-01/15/2023 TO-01/28/2023	401-06-2002		/ /		120.90
PROPERTY ASSESSMENTS 744.10								
DD R029094		WOMACK, VIRGINIA	PYRL FM-01/15/2023 TO-01/28/2023	422-66-2002		/ /		23.42
710.81			PYRL FM-01/15/2023 TO-01/28/2023	401-06-2002		/ /		35.15
02/02/2023			PYRL FM-01/15/2023 TO-01/28/2023	401-06-2002		/ /		291.11
			PYRL FM-01/15/2023 TO-01/28/2023	422-66-2002		/ /		202.29
			PYRL FM-01/15/2023 TO-01/28/2023	401-06-2002		/ /		7.48
			PYRL FM-01/15/2023 TO-01/28/2023	422-66-2002		/ /		7.47
			PYRL FM-01/15/2023 TO-01/28/2023	401-06-2002		/ /		8.22
			PYRL FM-01/15/2023 TO-01/28/2023	422-66-2002		/ /		4.10
			PYRL FM-01/15/2023 TO-01/28/2023	401-06-2002		/ /		78.94
			PYRL FM-01/15/2023 TO-01/28/2023	422-66-2002		/ /		52.63
REAPPRAISAL FUND 289.91 PROPERTY ASSESSMENTS 420.90								
DD R029095		ARMIJO, CORTNEY	PYRL FM-01/15/2023 TO-01/28/2023	401-04-2002		/ /		674.26
749.18			PYRL FM-01/15/2023 TO-01/28/2023	401-04-2002		/ /		74.92
02/02/2023								
OFFICE OF COUNTY CLERK 749.18								
DD R029096		DAVIS, EILEEN I	PYRL FM-01/15/2023 TO-01/28/2023	401-04-2002		/ /		731.66
818.63			PYRL FM-01/15/2023 TO-01/28/2023	401-04-2002		/ /		5.11
02/02/2023			PYRL FM-01/15/2023 TO-01/28/2023	401-04-2002		/ /		81.86
OFFICE OF COUNTY CLERK 818.63								
DD R029097		SOPKOWIAK, TERESA	PYRL FM-01/15/2023 TO-01/28/2023	401-04-2002		/ /		782.50
782.50								
02/02/2023								
OFFICE OF COUNTY CLERK 782.50								

CK#	DATE	Name	Description	Line Item	Invoice #	DATE	PO #	Amount
DD E029098		TRUJILLO, SHELLY K	PYRL FM-01/15/2023 TO-01/28/2023	401-04-2001		/ /		1282.11
1282.11								
02/02/2023								
OFFICE OF COUNTY CLERK 1282.11								
DD E029099		WHITEHEAD, AMY	PYRL FM-01/15/2023 TO-01/28/2023	401-04-2002		/ /		1287.11
1287.11								
02/02/2023								
OFFICE OF COUNTY CLERK 1287.11								
DD E029100		DAY, TRAVIS L	PYRL FM-01/15/2023 TO-01/28/2023	401-00-2001		/ /		701.13
701.13								
02/02/2023								
COMMISSIONERS 701.13								
DD E029101		PAXON, JAMES E JR	PYRL FM-01/15/2023 TO-01/28/2023	401-00-2001		/ /		593.26
593.26								
02/02/2023								
COMMISSIONERS 593.26								
DD E029102		HOPKINS, WILLIAM	PYRL FM-01/15/2023 TO-01/28/2023	401-00-2001		/ /		750.49
750.49								
02/02/2023								
COMMISSIONERS 750.49								
DD E029103		TITRA, BRITTNEY M	PYRL FM-01/15/2023 TO-01/28/2023	401-01-2002		/ /		596.62
795.50			PYRL FM-01/15/2023 TO-01/28/2023	508-39-2002		/ /		198.88
02/02/2023								
ADMINISTRATION 596.62 DWI PROGRAM FEES FUND 198.88								
DD E029104		LUCERO, SANDRA SEGURA	PYRL FM-01/15/2023 TO-01/28/2023	510-37-2002		/ /		1185.01
1185.01								
02/02/2023								
DWI GRANT FUND 1185.01								
DD E029105		SEGURA, VENESSA C	PYRL FM-01/15/2023 TO-01/28/2023	509-38-2002		/ /		866.80
912.41			PYRL FM-01/15/2023 TO-01/28/2023	509-38-2002		/ /		45.61
02/02/2023								
DWI DISTRIBUTION FUND 912.41								
DD E029106		ATWELL, TRAVIS	PYRL FM-01/15/2023 TO-01/28/2023	629-03-2002		/ /		1522.73
1522.73								
02/02/2023								
EMERGENCY MGMT SERVICE 1522.73								
DD E029107		WILLIAMS, RYAN R	PYRL FM-01/15/2023 TO-01/28/2023	629-03-2002		/ /		1497.08
1497.08								
02/02/2023								
EMERGENCY MGMT SERVICE 1497.08								

CK#	DATE	Name	Description	Line Item	Invoice #	DATE	PO #	Amount
DD E029108		ARMIJO, ERNIE L	PYRL FM-01/15/2023 TO-01/28/2023	401-02-2002		/ /		1159.38
1159.38								
02/02/2023								
FACILITIES MANAGEMENT 1159.38								
DD E029109		ATWELL, SHANE T	PYRL FM-01/15/2023 TO-01/28/2023	401-02-2002		/ /		792.30
792.30								
02/02/2023								
FACILITIES MANAGEMENT 792.30								
DD E029110		HEARN, MICHAEL	PYRL FM-01/15/2023 TO-01/28/2023	401-02-2002		/ /		925.76
925.76								
02/02/2023								
FACILITIES MANAGEMENT 925.76								
DD E029111		ALVAREZ GOMEZ, HECTOR	PYRL FM-01/15/2023 TO-01/28/2023	401-09-2002		/ /		984.55
1066.57			PYRL FM-01/15/2023 TO-01/28/2023	401-09-2002		/ /		23.42
02/02/2023			PYRL FM-01/15/2023 TO-01/28/2023	401-09-2005		/ /		35.11
			PYRL FM-01/15/2023 TO-01/28/2023	401-09-2002		/ /		23.49
DETENTION 1066.57								
DD E029112		EASLEY, JEREMIAH	PYRL FM-01/15/2023 TO-01/28/2023	401-09-2002		/ /		847.78
847.78								
02/02/2023								
DETENTION 847.78								
DD E029113		GARCIA, EDEN	PYRL FM-01/15/2023 TO-01/28/2023	401-09-2002		/ /		943.19
1308.36			PYRL FM-01/15/2023 TO-01/28/2023	401-09-2005		/ /		365.17
02/02/2023								
DETENTION 1308.36								
DD E029114		GUTIERREZ, LOURDES B	PYRL FM-01/15/2023 TO-01/28/2023	401-09-2002		/ /		150.70
753.49			PYRL FM-01/15/2023 TO-01/28/2023	401-09-2002		/ /		169.53
02/02/2023			PYRL FM-01/15/2023 TO-01/28/2023	401-09-2002		/ /		433.26
DETENTION 753.49								
DD E029115		LEE, VIRGINIA A	PYRL FM-01/15/2023 TO-01/28/2023	401-09-2004		/ /		800.06
800.06								
02/02/2023								
DETENTION 800.06								
DD E029116		LUCERO, RUBEN B	PYRL FM-01/15/2023 TO-01/28/2023	401-09-2002		/ /		1368.62
1605.48			PYRL FM-01/15/2023 TO-01/28/2023	401-09-2002		/ /		96.51
02/02/2023			PYRL FM-01/15/2023 TO-01/28/2023	401-09-2002		/ /		140.35
DETENTION 1605.48								
DD E029117		LUNA, TINO	PYRL FM-01/15/2023 TO-01/28/2023	500-49-2002		/ /		791.33
972.86			PYRL FM-01/15/2023 TO-01/28/2023	500-49-2002		/ /		181.53
02/02/2023								

CK#	DATE	Name	Description	Line Item	Invoice #	DATE	PO #	Amount
COSSAP FEDERAL GRANT 972.86								
DD E029118		MILLER, EMILY P	PYRL FM-01/15/2023 TO-01/28/2023 401-09-2002			/ /		807.18
894.43			PYRL FM-01/15/2023 TO-01/28/2023 401-09-2002			/ /		87.25
02/02/2023								
DETENTION 894.43								
DD E029119		MONTOYA, ALICE	PYRL FM-01/15/2023 TO-01/28/2023 401-09-2002			/ /		848.71
848.71								
02/02/2023								
DETENTION 848.71								
DD E029120		MURATI, PAMELA	PYRL FM-01/15/2023 TO-01/28/2023 500-48-2002			/ /		554.29
685.67			PYRL FM-01/15/2023 TO-01/28/2023 500-48-2002			/ /		131.38
02/02/2023								
RISE GRANT 685.67								
DD E029121		NIEVES, SANTIAGO	PYRL FM-01/15/2023 TO-01/28/2023 401-09-2002			/ /		504.84
837.94			PYRL FM-01/15/2023 TO-01/28/2023 401-09-2002			/ /		333.10
02/02/2023								
DETENTION 837.94								
DD E029122		SCHMIDT, JEREMY	PYRL FM-01/15/2023 TO-01/28/2023 401-09-2002			/ /		994.69
1247.50			PYRL FM-01/15/2023 TO-01/28/2023 401-09-2005			/ /		252.81
02/02/2023								
DETENTION 1247.50								
DD E029123		WHITEHEAD, TREVOR	PYRL FM-01/15/2023 TO-01/28/2023 401-09-2002			/ /		780.63
803.74			PYRL FM-01/15/2023 TO-01/28/2023 401-09-2005			/ /		23.11
02/02/2023								
DETENTION 803.74								
DD E029124		CRAWFORD, THOMAS EDWARD	PYRL FM-01/15/2023 TO-01/28/2023 405-67-2004			/ /		389.67
389.67								
02/02/2023								
LANDFILL 389.67								
DD E029125		SHETTER, TINA K	PYRL FM-01/15/2023 TO-01/28/2023 405-67-2004			/ /		446.77
446.77								
02/02/2023								
LANDFILL 446.77								
DD E029126		PESTAK, THOMAS	PYRL FM-01/15/2023 TO-01/28/2023 401-15-2001			/ /		524.41
524.41								
02/02/2023								
PROBATE JUDGE 524.41								
DD E029127		CARSON, ELIZABETH L	PYRL FM-01/15/2023 TO-01/28/2023 402-50-2002			/ /		349.81
746.26			PYRL FM-01/15/2023 TO-01/28/2023 405-67-2002			/ /		116.59

CK#	DATE	Name	Description	Line Item	Invoice #	DATE	PO #	Amount
	02/02/2023		PYRL FM-01/15/2023 TO-01/28/2023	402-50-2002		/ /		209.88
			PYRL FM-01/15/2023 TO-01/28/2023	405-67-2002		/ /		69.98
ROAD		559.69	LANDFILL	186.57				
DD E029128		CARSON, KARL L	PYRL FM-01/15/2023 TO-01/28/2023	402-50-2002		/ /		797.51
	938.26		PYRL FM-01/15/2023 TO-01/28/2023	402-50-2002		/ /		23.44
	02/02/2023		PYRL FM-01/15/2023 TO-01/28/2023	402-50-2002		/ /		117.31
ROAD		938.26						
DD E029129		CHAVEZ, JOSHUA D	PYRL FM-01/15/2023 TO-01/28/2023	402-50-2002		/ /		1014.18
	1014.18							
	02/02/2023							
ROAD		1014.18						
DD E029130		FAULKNER, NEAL M	PYRL FM-01/15/2023 TO-01/28/2023	402-50-2002		/ /		726.41
	854.61		PYRL FM-01/15/2023 TO-01/28/2023	402-50-2002		/ /		21.37
	02/02/2023		PYRL FM-01/15/2023 TO-01/28/2023	402-50-2002		/ /		106.83
ROAD		854.61						
DD E029131		GREGORY, J WALTER	PYRL FM-01/15/2023 TO-01/28/2023	402-50-2002		/ /		630.43
	648.97		PYRL FM-01/15/2023 TO-01/28/2023	402-50-2002		/ /		18.54
	02/02/2023							
ROAD		648.97						
DD E029132		LUCERO, ALBERT J	PYRL FM-01/15/2023 TO-01/28/2023	402-50-2002		/ /		826.28
	847.46		PYRL FM-01/15/2023 TO-01/28/2023	402-50-2002		/ /		21.18
	02/02/2023							
ROAD		847.46						
DD E029133		NEELEY, WILLIAM W	PYRL FM-01/15/2023 TO-01/28/2023	402-50-2002		/ /		1104.37
	1299.26		PYRL FM-01/15/2023 TO-01/28/2023	405-67-2002		/ /		194.89
	02/02/2023							
ROAD		1104.37	LANDFILL	194.89				
DD E029134		POWELL, CODY J	PYRL FM-01/15/2023 TO-01/28/2023	402-50-2002		/ /		664.39
	775.93		PYRL FM-01/15/2023 TO-01/28/2023	402-50-2002		/ /		111.54
	02/02/2023							
ROAD		775.93						
DD E029135		SHETTER, RICHARD L	PYRL FM-01/15/2023 TO-01/28/2023	402-50-2002		/ /		669.27
	1189.83		PYRL FM-01/15/2023 TO-01/28/2023	402-50-2002		/ /		520.56
	02/02/2023							
ROAD		1189.83						
DD E029136		YOUNG, CALEB D	PYRL FM-01/15/2023 TO-01/28/2023	402-50-2002		/ /		437.04
	874.14		PYRL FM-01/15/2023 TO-01/28/2023	402-50-2002		/ /		87.42
	02/02/2023		PYRL FM-01/15/2023 TO-01/28/2023	402-50-2002		/ /		349.68
ROAD		874.14						

CK#	DATE	Name	Description	Line Item	Invoice #	DATE	PO #	Amount
DD R029137		ANDERSON, SHERRY L	PYRL FM-01/15/2023 TO-01/28/2023	634-32-2002		/ /		745.79
1396.73			PYRL FM-01/15/2023 TO-01/28/2023	634-32-2005		/ /		563.20
02/02/2023			PYRL FM-01/15/2023 TO-01/28/2023	634-32-2002		/ /		87.74
DISPATCH	1396.73							
DD R029138		ATWELL, MICHELLE	PYRL FM-01/15/2023 TO-01/28/2023	634-32-2002		/ /		1123.80
1123.80								
02/02/2023								
DISPATCH	1123.80							
DD R029139		BILYEU, LANDEN M	PYRL FM-01/15/2023 TO-01/28/2023	634-32-2002		/ /		705.81
1042.66			PYRL FM-01/15/2023 TO-01/28/2023	634-32-2002		/ /		78.39
02/02/2023			PYRL FM-01/15/2023 TO-01/28/2023	634-32-2005		/ /		160.00
			PYRL FM-01/15/2023 TO-01/28/2023	634-32-2002		/ /		78.46
DISPATCH	1042.66							
DD R029140		BROWN, ALANA	PYRL FM-01/15/2023 TO-01/28/2023	634-32-2002		/ /		769.76
940.84			PYRL FM-01/15/2023 TO-01/28/2023	634-32-2002		/ /		85.51
02/02/2023			PYRL FM-01/15/2023 TO-01/28/2023	634-32-2002		/ /		85.57
DISPATCH	940.84							
DD R029141		CHERRY, CURTIS D	PYRL FM-01/15/2023 TO-01/28/2023	634-32-2002		/ /		810.82
1209.66			PYRL FM-01/15/2023 TO-01/28/2023	634-32-2002		/ /		90.06
02/02/2023			PYRL FM-01/15/2023 TO-01/28/2023	634-32-2005		/ /		218.64
			PYRL FM-01/15/2023 TO-01/28/2023	634-32-2002		/ /		90.14
DISPATCH	1209.66							
DD R029142		CROM, NADINE	PYRL FM-01/15/2023 TO-01/28/2023	634-32-2002		/ /		888.44
1203.07			PYRL FM-01/15/2023 TO-01/28/2023	634-32-2002		/ /		98.69
02/02/2023			PYRL FM-01/15/2023 TO-01/28/2023	634-32-2005		/ /		117.20
			PYRL FM-01/15/2023 TO-01/28/2023	634-32-2002		/ /		98.74
DISPATCH	1203.07							
DD R029143		DEMELLO, MARK	PYRL FM-01/15/2023 TO-01/28/2023	634-32-2002		/ /		254.96
254.96								
02/02/2023								
DISPATCH	254.96							
DD R029144		HENRY, JOSEPH A	PYRL FM-01/15/2023 TO-01/28/2023	634-32-2002		/ /		314.62
915.87			PYRL FM-01/15/2023 TO-01/28/2023	634-32-2002		/ /		39.33
02/02/2023			PYRL FM-01/15/2023 TO-01/28/2023	634-32-2005		/ /		90.00
			PYRL FM-01/15/2023 TO-01/28/2023	634-32-2002		/ /		353.92
			PYRL FM-01/15/2023 TO-01/28/2023	634-32-2002		/ /		39.34
			PYRL FM-01/15/2023 TO-01/28/2023	634-32-2002		/ /		78.66
DISPATCH	915.87							
DD R029145		LUNSFORD, KALLIE	PYRL FM-01/15/2023 TO-01/28/2023	634-32-2002		/ /		577.73
1234.55			PYRL FM-01/15/2023 TO-01/28/2023	634-32-2005		/ /		390.18
02/02/2023			PYRL FM-01/15/2023 TO-01/28/2023	634-32-2002		/ /		177.77
			PYRL FM-01/15/2023 TO-01/28/2023	634-32-2002		/ /		88.87
DISPATCH	1234.55							

CK#	DATE	Name	Description	Line Item	Invoice #	DATE	PO #	Amount
DD E029146		REDDELL, IMIGEN A	PYRL FM-01/15/2023 TO-01/28/2023	634-32-2002		/ /		309.84
903.30			PYRL FM-01/15/2023 TO-01/28/2023	634-32-2002		/ /		38.72
02/02/2023			PYRL FM-01/15/2023 TO-01/28/2023	634-32-2005		/ /		90.00
			PYRL FM-01/15/2023 TO-01/28/2023	634-32-2002		/ /		387.27
			PYRL FM-01/15/2023 TO-01/28/2023	634-32-2002		/ /		77.47
DISPATCH		903.30						
DD E029147		STANLEY, JESSICA	PYRL FM-01/15/2023 TO-01/28/2023	634-32-2002		/ /		798.35
1097.73			PYRL FM-01/15/2023 TO-01/28/2023	634-32-2002		/ /		99.80
02/02/2023			PYRL FM-01/15/2023 TO-01/28/2023	634-32-2002		/ /		99.76
			PYRL FM-01/15/2023 TO-01/28/2023	634-32-2002		/ /		99.82
DISPATCH		1097.73						
DD E029148		TORREZ, CANDY	PYRL FM-01/15/2023 TO-01/28/2023	634-32-2002		/ /		720.84
1967.75			PYRL FM-01/15/2023 TO-01/28/2023	634-32-2002		/ /		197.12
02/02/2023			PYRL FM-01/15/2023 TO-01/28/2023	634-32-2005		/ /		887.04
			PYRL FM-01/15/2023 TO-01/28/2023	634-32-2002		/ /		69.75
			PYRL FM-01/15/2023 TO-01/28/2023	634-32-2002		/ /		93.00
DISPATCH		1967.75						
DD E029149		YAW, LAKEN	PYRL FM-01/15/2023 TO-01/28/2023	634-32-2002		/ /		661.15
1286.79			PYRL FM-01/15/2023 TO-01/28/2023	634-32-2005		/ /		501.66
02/02/2023			PYRL FM-01/15/2023 TO-01/28/2023	634-32-2002		/ /		41.33
			PYRL FM-01/15/2023 TO-01/28/2023	634-32-2002		/ /		82.65
DISPATCH		1286.79						
DD E029150		APODACA, VINCENT E	PYRL FM-01/15/2023 TO-01/28/2023	401-08-2002		/ /		1037.95
2184.61			PYRL FM-01/15/2023 TO-01/28/2023	401-08-2005		/ /		553.56
02/02/2023			PYRL FM-01/15/2023 TO-01/28/2023	500-08-2005		/ /		593.10
LAW ENFORCEMENT		2184.61						
DD E029151		AVALOS, ENRIQUE	PYRL FM-01/15/2023 TO-01/28/2023	401-08-2002		/ /		1091.89
1218.04			PYRL FM-01/15/2023 TO-01/28/2023	404-65-2002		/ /		126.15
02/02/2023								
LAW ENFORCEMENT		1091.89	WHITE SANDS MISSLE RAN	126.15				
DD E029152		BAKER, JOSHUA D	PYRL FM-01/15/2023 TO-01/28/2023	401-08-2001		/ /		1620.85
1620.85								
02/02/2023								
LAW ENFORCEMENT		1620.85						
DD E029153		CARREON, ALEJANDRO I	PYRL FM-01/15/2023 TO-01/28/2023	401-08-2002		/ /		1199.14
1199.14								
02/02/2023								
LAW ENFORCEMENT		1199.14						
DD E029154		HAYES, KONNI J	PYRL FM-01/15/2023 TO-01/28/2023	401-08-2002		/ /		792.58
845.42			PYRL FM-01/15/2023 TO-01/28/2023	401-08-2002		/ /		52.84
02/02/2023								
LAW ENFORCEMENT		845.42						

CK#	DATE	Name	Description	Line Item	Invoice #	DATE	PO #	Amount
DD E029155		MARIN, JOSE	PYRL FM-01/15/2023 TO-01/28/2023	401-08-2002		/ /		938.82
938.82								
02/02/2023								
LAW ENFORCEMENT		938.82						
DD E029156		MYERS, JUSTIN	PYRL FM-01/15/2023 TO-01/28/2023	401-08-2002		/ /		1116.24
1712.18			PYRL FM-01/15/2023 TO-01/28/2023	404-65-2002		/ /		182.93
02/02/2023			PYRL FM-01/15/2023 TO-01/28/2023	401-08-2005		/ /		95.31
			PYRL FM-01/15/2023 TO-01/28/2023	500-08-2005		/ /		317.70
LAW ENFORCEMENT		1529.25	WHITE SANDS MISSLE RAN 182.93					
DD E029157		SPENCER, BRADLEY M	PYRL FM-01/15/2023 TO-01/28/2023	401-08-2002		/ /		1071.59
1071.59								
02/02/2023								
LAW ENFORCEMENT		1071.59						
DD E029158		THOMPSON, KAREN L	PYRL FM-01/15/2023 TO-01/28/2023	401-08-2002		/ /		1065.50
1065.50								
02/02/2023								
LAW ENFORCEMENT		1065.50						
DD E029159		TREJO, JOEL	PYRL FM-01/15/2023 TO-01/28/2023	401-08-2002		/ /		549.75
1325.85			PYRL FM-01/15/2023 TO-01/28/2023	401-08-2002		/ /		776.10
02/02/2023								
LAW ENFORCEMENT		1325.85						
DD E029160		ZAGORSKI, ANTHONY C	PYRL FM-01/15/2023 TO-01/28/2023	401-08-2002		/ /		965.78
1791.23			PYRL FM-01/15/2023 TO-01/28/2023	404-65-2002		/ /		158.28
02/02/2023			PYRL FM-01/15/2023 TO-01/28/2023	401-08-2005		/ /		285.93
			PYRL FM-01/15/2023 TO-01/28/2023	500-08-2005		/ /		381.24
LAW ENFORCEMENT		1632.95	WHITE SANDS MISSLE RAN 158.28					
DD E029161		ZAVALA, ZACHARY	PYRL FM-01/15/2023 TO-01/28/2023	401-08-2002		/ /		972.89
1383.53			PYRL FM-01/15/2023 TO-01/28/2023	401-08-2002		/ /		141.00
02/02/2023			PYRL FM-01/15/2023 TO-01/28/2023	404-65-2002		/ /		128.65
			PYRL FM-01/15/2023 TO-01/28/2023	401-08-2002		/ /		140.99
LAW ENFORCEMENT		1254.88	WHITE SANDS MISSLE RAN 128.65					
DD E029162		CHAVEZ, CANDACE D	PYRL FM-01/15/2023 TO-01/28/2023	401-07-2001		/ /		1870.30
1870.30								
02/02/2023								
TREASURERS		1870.30						
DD E029163		GODFREY, JANET	PYRL FM-01/15/2023 TO-01/28/2023	401-07-2002		/ /		639.31
639.31								
02/02/2023								
TREASURERS		639.31						
DD E029164		HOLLY, JOSEPHINE E	PYRL FM-01/15/2023 TO-01/28/2023	401-07-2002		/ /		576.01

CK#	DATE	Name	Description	Line Item	Invoice #	DATE	PO #	Amount
743.23			PYRL FM-01/15/2023 TO-01/28/2023	401-07-2002		/ /		92.90
02/02/2023			PYRL FM-01/15/2023 TO-01/28/2023	401-07-2002		/ /		74.32
TREASURERS		743.23						
DD E029165		ROBERTS, CONSTANCE	PYRL FM-01/15/2023 TO-01/28/2023	401-07-2002		/ /		499.42
499.42								
02/02/2023								
TREASURERS		499.42						
DD E029166		RODRIGUEZ, CINDY J	PYRL FM-01/15/2023 TO-01/28/2023	401-07-2002		/ /		1348.94
1348.94								
02/02/2023								
TREASURERS		1348.94						
02 R 42785		HAMILTON, GLENN	PYRL FM-01/15/2023 TO-01/28/2023	401-08-2002		/ /		1592.67
1592.67								
02/02/2023								
LAW ENFORCEMENT		1592.67						
03 R128010		AMERICAN FAMILY LIFE ASSURANCE	AFLAC DED PAYDAY 01/19/2023	402-50-2002		/ /		9.31
2806.92			AFLAC DED PAYDAY 01/19/2023	405-67-2002		/ /		3.11
02/03/2023			AFLACPRE DED PAYDAY 01/19/2023	401-01-2002		/ /		272.60
			AFLACPRE DED PAYDAY 01/19/2023	401-02-2002		/ /		28.74
			AFLACPRE DED PAYDAY 01/19/2023	401-04-2002		/ /		180.46
			AFLACPRE DED PAYDAY 01/19/2023	401-06-2001		/ /		43.16
			AFLACPRE DED PAYDAY 01/19/2023	401-06-2002		/ /		53.16
			AFLACPRE DED PAYDAY 01/19/2023	401-07-2001		/ /		42.09
			AFLACPRE DED PAYDAY 01/19/2023	401-07-2002		/ /		166.70
			AFLACPRE DED PAYDAY 01/19/2023	401-08-2002		/ /		101.85
			AFLACPRE DED PAYDAY 01/19/2023	401-09-2002		/ /		118.08
			AFLACPRE DED PAYDAY 01/19/2023	402-50-2002		/ /		196.04
			AFLACPRE DED PAYDAY 01/19/2023	405-67-2002		/ /		25.95
			AFLACPRE DED PAYDAY 01/19/2023	500-48-2002		/ /		16.56
			AFLACPRE DED PAYDAY 01/19/2023	508-39-2002		/ /		6.06
			AFLACPRE DED PAYDAY 01/19/2023	510-37-2002		/ /		70.35
			AFLACPRE DED PAYDAY 01/19/2023	634-32-2002		/ /		84.75
			AFLAC DED PAYDAY 02/02/2023	402-50-2002		/ /		9.32
			AFLAC DED PAYDAY 02/02/2023	405-67-2002		/ /		3.10
			AFLACPRE DED PAYDAY 02/02/2023	401-01-2002		/ /		272.60
			AFLACPRE DED PAYDAY 02/02/2023	401-02-2002		/ /		28.74
			AFLACPRE DED PAYDAY 02/02/2023	401-04-2002		/ /		180.46
			AFLACPRE DED PAYDAY 02/02/2023	401-06-2001		/ /		43.16
			AFLACPRE DED PAYDAY 02/02/2023	401-06-2002		/ /		53.16
			AFLACPRE DED PAYDAY 02/02/2023	401-07-2001		/ /		42.09
			AFLACPRE DED PAYDAY 02/02/2023	401-07-2002		/ /		166.70
			AFLACPRE DED PAYDAY 02/02/2023	401-08-2002		/ /		70.83
			AFLACPRE DED PAYDAY 02/02/2023	401-09-2002		/ /		118.08
			AFLACPRE DED PAYDAY 02/02/2023	402-50-2002		/ /		196.05
			AFLACPRE DED PAYDAY 02/02/2023	405-67-2002		/ /		25.94
			AFLACPRE DED PAYDAY 02/02/2023	500-48-2002		/ /		16.56
			AFLACPRE DED PAYDAY 02/02/2023	508-39-2002		/ /		6.06
			AFLACPRE DED PAYDAY 02/02/2023	510-37-2002		/ /		70.35
			AFLACPRE DED PAYDAY 02/02/2023	634-32-2002		/ /		84.75

ROAD 410.72 LANDFILL 58.10 ADMINISTRATION 545.20

CK#	DATE	Name	Description	Line Item	Invoice #	DATE	PO #	Amount

FACILITIES MANAGEMENT	57.48	OFFICE OF COUNTY CLERK	360.92	PROPERTY ASSESSMENTS	192.64
TREASURERS	417.58	LAW ENFORCEMENT	172.68	DETENTION	236.16
RISE GRANT	33.12	DWI PROGRAM FEES FUND	12.12	DWI GRANT FUND	140.70
DISPATCH	169.50				

03 R128011	LEGALSHIELD	.	PREPDLEG DED	PAYDAY 01/19/2023 401-01-2002		/ /	26.43
411.06			PREPDLEG DED	PAYDAY 01/19/2023 401-04-2001		/ /	16.95
02/03/2023			PREPDLEG DED	PAYDAY 01/19/2023 401-04-2002		/ /	17.70
			PREPDLEG DED	PAYDAY 01/19/2023 401-06-2002		/ /	10.29
			PREPDLEG DED	PAYDAY 01/19/2023 401-07-2002		/ /	24.40
			PREPDLEG DED	PAYDAY 01/19/2023 401-08-2002		/ /	37.09
			PREPDLEG DED	PAYDAY 01/19/2023 402-50-2002		/ /	16.95
			PREPDLEG DED	PAYDAY 01/19/2023 422-66-2002		/ /	6.66
			PREPDLEG DED	PAYDAY 01/19/2023 500-48-2002		/ /	15.65
			PREPDLEG DED	PAYDAY 01/19/2023 510-37-2002		/ /	14.45
			PREPDLEG DED	PAYDAY 01/19/2023 634-32-2002		/ /	18.96
			PREPDLEG DED	PAYDAY 02/02/2023 401-01-2002		/ /	26.43
			PREPDLEG DED	PAYDAY 02/02/2023 401-04-2001		/ /	16.95
			PREPDLEG DED	PAYDAY 02/02/2023 401-04-2002		/ /	17.70
			PREPDLEG DED	PAYDAY 02/02/2023 401-06-2002		/ /	10.04
			PREPDLEG DED	PAYDAY 02/02/2023 401-07-2002		/ /	24.40
			PREPDLEG DED	PAYDAY 02/02/2023 401-08-2002		/ /	37.09
			PREPDLEG DED	PAYDAY 02/02/2023 402-50-2002		/ /	16.95
			PREPDLEG DED	PAYDAY 02/02/2023 422-66-2002		/ /	6.91
			PREPDLEG DED	PAYDAY 02/02/2023 500-48-2002		/ /	15.65
			PREPDLEG DED	PAYDAY 02/02/2023 510-37-2002		/ /	14.45
			PREPDLEG DED	PAYDAY 02/02/2023 634-32-2002		/ /	18.96

ADMINISTRATION	52.86	OFFICE OF COUNTY CLERK	69.30	PROPERTY ASSESSMENTS	20.33
TREASURERS	48.80	LAW ENFORCEMENT	74.18	ROAD	33.90
REAPPRAISAL FUND	13.57	RISE GRANT	31.30	DWI GRANT FUND	28.90
DISPATCH	37.92				

03 R128012	LIBERTY NATIONAL LIFE INSURANCE	LIBPOP DED	PAYDAY 01/19/2023 401-01-2002		/ /	141.80
1358.80		LIBPOP DED	PAYDAY 01/19/2023 401-02-2002		/ /	18.30
02/03/2023		LIBPOP DED	PAYDAY 01/19/2023 401-04-2002		/ /	5.18
		LIBPOP DED	PAYDAY 01/19/2023 401-08-2001		/ /	42.30
		LIBPOP DED	PAYDAY 01/19/2023 401-08-2002		/ /	87.88
		LIBPOP DED	PAYDAY 01/19/2023 401-09-2002		/ /	60.72
		LIBPOP DED	PAYDAY 01/19/2023 402-50-2002		/ /	119.40
		LIBPOP DED	PAYDAY 01/19/2023 405-67-2002		/ /	5.72
		LIBPOP DED	PAYDAY 01/19/2023 500-48-2002		/ /	38.18
		LIBPOP DED	PAYDAY 01/19/2023 629-03-2002		/ /	16.92
		LIBPOP DED	PAYDAY 01/19/2023 634-32-2002		/ /	143.00
		LIBPOP DED	PAYDAY 02/02/2023 401-01-2002		/ /	141.80
		LIBPOP DED	PAYDAY 02/02/2023 401-02-2002		/ /	18.30
		LIBPOP DED	PAYDAY 02/02/2023 401-04-2002		/ /	5.18
		LIBPOP DED	PAYDAY 02/02/2023 401-08-2001		/ /	42.30
		LIBPOP DED	PAYDAY 02/02/2023 401-08-2002		/ /	87.88
		LIBPOP DED	PAYDAY 02/02/2023 401-09-2002		/ /	60.72
		LIBPOP DED	PAYDAY 02/02/2023 402-50-2002		/ /	119.40
		LIBPOP DED	PAYDAY 02/02/2023 405-67-2002		/ /	5.72
		LIBPOP DED	PAYDAY 02/02/2023 500-48-2002		/ /	38.18
		LIBPOP DED	PAYDAY 02/02/2023 629-03-2002		/ /	16.92
		LIBPOP DED	PAYDAY 02/02/2023 634-32-2002		/ /	143.00

ADMINISTRATION	283.60	FACILITIES MANAGEMENT	36.60	OFFICE OF COUNTY CLERK	10.36
LAW ENFORCEMENT	260.36	DETENTION	121.44	ROAD	238.80
LANDFILL	11.44	RISE GRANT	76.36	EMERGENCY MGMT SERVICE	33.84

CK#	DATE	Name	Description	Line Item	Invoice #	DATE	PO #	Amount
DISPATCH		266.00						
03 R128013		LIBERTY NATIONAL LIFE INSURANCE	LIBERTYN DED	PAYDAY 01/19/2023 401-01-2002		/ /		19.84
	468.84		LIBERTYN DED	PAYDAY 01/19/2023 401-04-2002		/ /		26.00
	02/03/2023		LIBERTYN DED	PAYDAY 01/19/2023 401-06-2001		/ /		10.54
			LIBERTYN DED	PAYDAY 01/19/2023 401-08-2002		/ /		29.74
			LIBERTYN DED	PAYDAY 01/19/2023 401-09-2002		/ /		56.62
			LIBERTYN DED	PAYDAY 01/19/2023 402-50-2002		/ /		29.14
			LIBERTYN DED	PAYDAY 01/19/2023 500-48-2002		/ /		15.52
			LIBERTYN DED	PAYDAY 01/19/2023 629-03-2002		/ /		19.24
			LIBERTYN DED	PAYDAY 01/19/2023 634-32-2002		/ /		27.78
			LIBERTYN DED	PAYDAY 02/02/2023 401-01-2002		/ /		19.84
			LIBERTYN DED	PAYDAY 02/02/2023 401-04-2002		/ /		26.00
			LIBERTYN DED	PAYDAY 02/02/2023 401-06-2001		/ /		10.54
			LIBERTYN DED	PAYDAY 02/02/2023 401-08-2002		/ /		29.74
			LIBERTYN DED	PAYDAY 02/02/2023 401-09-2002		/ /		56.62
			LIBERTYN DED	PAYDAY 02/02/2023 402-50-2002		/ /		29.14
			LIBERTYN DED	PAYDAY 02/02/2023 500-48-2002		/ /		15.52
			LIBERTYN DED	PAYDAY 02/02/2023 629-03-2002		/ /		19.24
			LIBERTYN DED	PAYDAY 02/02/2023 634-32-2002		/ /		27.78

ADMINISTRATION	39.68	OFFICE OF COUNTY CLERK	52.00	PROPERTY ASSESSMENTS	21.08
LAW ENFORCEMENT	59.48	DETENTION	113.24	ROAD	58.28
RISE GRANT	31.04	EMERGENCY MGMT SERVICE	38.48	DISPATCH	55.56

03 R128014		ADMINISTRATIVE SERVICES DIVISIO	BCBS HMO DED	PAYDAY 01/19/2023 401-08-2002		/ /		139.70
	72416.36		BCBS HMO DED	PAYDAY 01/19/2023 402-50-2002		/ /		111.83
	02/03/2023		BCBS HMO DED	PAYDAY 01/19/2023 405-67-2002		/ /		9.07
			BCBS HMO DED	PAYDAY 01/19/2023 500-48-2002		/ /		60.45
			BCBS HMO DED	PAYDAY 01/19/2023 634-32-2002		/ /		79.25
			BCBS HMO MATCH	PAYDAY 01/19/2023 401-08-2660		/ /		1257.26
			BCBS HMO MATCH	PAYDAY 01/19/2023 402-50-2660		/ /		1006.42
			BCBS HMO MATCH	PAYDAY 01/19/2023 405-67-2660		/ /		81.60
			BCBS HMO MATCH	PAYDAY 01/19/2023 500-48-2660		/ /		544.01
			BCBS HMO MATCH	PAYDAY 01/19/2023 634-32-2660		/ /		713.25
			BCBSEMPP DED	PAYDAY 01/19/2023 401-06-2002		/ /		62.50
			BCBSEMPP DED	PAYDAY 01/19/2023 401-08-2002		/ /		62.50
			BCBSEMPP DED	PAYDAY 01/19/2023 401-09-2002		/ /		62.50
			BCBSEMPP DED	PAYDAY 01/19/2023 402-50-2002		/ /		117.19
			BCBSEMPP DED	PAYDAY 01/19/2023 405-67-2002		/ /		7.81
			BCBSEMPP DED	PAYDAY 01/19/2023 634-32-2002		/ /		156.25
			BCBSEMPP MATCH	PAYDAY 01/19/2023 401-06-2660		/ /		562.36
			BCBSEMPP MATCH	PAYDAY 01/19/2023 401-08-2660		/ /		562.36
			BCBSEMPP MATCH	PAYDAY 01/19/2023 401-09-2660		/ /		562.36
			BCBSEMPP MATCH	PAYDAY 01/19/2023 402-50-2660		/ /		1054.42
			BCBSEMPP MATCH	PAYDAY 01/19/2023 405-67-2660		/ /		70.30
			BCBSEMPP MATCH	PAYDAY 01/19/2023 634-32-2660		/ /		1405.90
			BCBSFMPP DED	PAYDAY 01/19/2023 401-01-2002		/ /		92.18
			BCBSFMPP DED	PAYDAY 01/19/2023 401-07-2002		/ /		92.18
			BCBSFMPP DED	PAYDAY 01/19/2023 401-08-2002		/ /		184.36
			BCBSFMPP DED	PAYDAY 01/19/2023 634-32-2002		/ /		92.18
			BCBSFMPP MATCH	PAYDAY 01/19/2023 401-01-2660		/ /		829.56
			BCBSFMPP MATCH	PAYDAY 01/19/2023 401-07-2660		/ /		829.56
			BCBSFMPP MATCH	PAYDAY 01/19/2023 401-08-2660		/ /		1659.12
			BCBSFMPP MATCH	PAYDAY 01/19/2023 634-32-2660		/ /		829.56
			BCBSHMO DED	PAYDAY 01/19/2023 401-01-2002		/ /		53.74
			BCBSHMO DED	PAYDAY 01/19/2023 401-06-2002		/ /		16.07
			BCBSHMO DED	PAYDAY 01/19/2023 401-09-2002		/ /		134.35
			BCBSHMO DED	PAYDAY 01/19/2023 422-66-2002		/ /		10.80

CK#	DATE	Name	Description	Line Item	Invoice #	DATE	PO #	Amount
			BCBSHMO DED PAYDAY 01/19/2023	634-32-2002		/ /		26.87
			BCBSHMO MATCH PAYDAY 01/19/2023	401-01-2660		/ /		483.54
			BCBSHMO MATCH PAYDAY 01/19/2023	401-06-2660		/ /		145.07
			BCBSHMO MATCH PAYDAY 01/19/2023	401-09-2660		/ /		1208.85
			BCBSHMO MATCH PAYDAY 01/19/2023	422-66-2660		/ /		96.70
			BCBSHMO MATCH PAYDAY 01/19/2023	634-32-2660		/ /		241.77
			BCBSSICH DED PAYDAY 01/19/2023	401-01-2002		/ /		56.24
			BCBSSICH DED PAYDAY 01/19/2023	402-50-2002		/ /		56.24
			BCBSSICH DED PAYDAY 01/19/2023	634-32-2002		/ /		56.24
			BCBSSICH MATCH PAYDAY 01/19/2023	401-01-2660		/ /		506.15
			BCBSSICH MATCH PAYDAY 01/19/2023	402-50-2660		/ /		506.15
			BCBSSICH MATCH PAYDAY 01/19/2023	634-32-2660		/ /		506.15
			BCBSSPPO DED PAYDAY 01/19/2023	401-01-2002		/ /		70.30
			BCBSSPPO DED PAYDAY 01/19/2023	401-04-2002		/ /		70.30
			BCBSSPPO DED PAYDAY 01/19/2023	401-08-2002		/ /		140.60
			BCBSSPPO DED PAYDAY 01/19/2023	402-50-2002		/ /		70.30
			BCBSSPPO DED PAYDAY 01/19/2023	629-03-2002		/ /		70.30
			BCBSSPPO DED PAYDAY 01/19/2023	634-32-2002		/ /		70.30
			BCBSSPPO MATCH PAYDAY 01/19/2023	401-01-2660		/ /		632.70
			BCBSSPPO MATCH PAYDAY 01/19/2023	401-04-2660		/ /		632.70
			BCBSSPPO MATCH PAYDAY 01/19/2023	401-08-2660		/ /		1265.40
			BCBSSPPO MATCH PAYDAY 01/19/2023	402-50-2660		/ /		632.70
			BCBSSPPO MATCH PAYDAY 01/19/2023	629-03-2660		/ /		632.70
			BCBSSPPO MATCH PAYDAY 01/19/2023	634-32-2660		/ /		632.70
			DELTACPL DED PAYDAY 01/19/2023	401-00-2001		/ /		3.23
			DELTACPL DED PAYDAY 01/19/2023	401-01-2002		/ /		3.23
			DELTACPL DED PAYDAY 01/19/2023	401-04-2002		/ /		3.23
			DELTACPL DED PAYDAY 01/19/2023	401-06-2002		/ /		7.15
			DELTACPL DED PAYDAY 01/19/2023	401-07-2001		/ /		3.23
			DELTACPL DED PAYDAY 01/19/2023	401-07-2002		/ /		6.46
			DELTACPL DED PAYDAY 01/19/2023	401-08-2002		/ /		19.38
			DELTACPL DED PAYDAY 01/19/2023	401-09-2002		/ /		3.23
			DELTACPL DED PAYDAY 01/19/2023	401-09-2004		/ /		3.23
			DELTACPL DED PAYDAY 01/19/2023	402-50-2002		/ /		12.44
			DELTACPL DED PAYDAY 01/19/2023	405-67-2002		/ /		.48
			DELTACPL DED PAYDAY 01/19/2023	422-66-2002		/ /		2.54
			DELTACPL DED PAYDAY 01/19/2023	500-48-2002		/ /		3.23
			DELTACPL DED PAYDAY 01/19/2023	629-03-2002		/ /		3.23
			DELTACPL DED PAYDAY 01/19/2023	634-32-2002		/ /		3.23
			DELTACPL MATCH PAYDAY 01/19/2023	401-00-2660		/ /		29.07
			DELTACPL MATCH PAYDAY 01/19/2023	401-01-2660		/ /		29.07
			DELTACPL MATCH PAYDAY 01/19/2023	401-04-2660		/ /		29.07
			DELTACPL MATCH PAYDAY 01/19/2023	401-06-2660		/ /		64.46
			DELTACPL MATCH PAYDAY 01/19/2023	401-07-2660		/ /		87.21
			DELTACPL MATCH PAYDAY 01/19/2023	401-08-2660		/ /		174.42
			DELTACPL MATCH PAYDAY 01/19/2023	401-09-2660		/ /		58.14
			DELTACPL MATCH PAYDAY 01/19/2023	402-50-2660		/ /		111.92
			DELTACPL MATCH PAYDAY 01/19/2023	405-67-2660		/ /		4.36
			DELTACPL MATCH PAYDAY 01/19/2023	422-66-2660		/ /		22.75
			DELTACPL MATCH PAYDAY 01/19/2023	500-48-2660		/ /		29.07
			DELTACPL MATCH PAYDAY 01/19/2023	629-03-2660		/ /		29.07
			DELTACPL MATCH PAYDAY 01/19/2023	634-32-2660		/ /		29.07
			DELTAEMP DED PAYDAY 01/19/2023	401-01-2002		/ /		4.86
			DELTAEMP DED PAYDAY 01/19/2023	401-02-2002		/ /		1.62
			DELTAEMP DED PAYDAY 01/19/2023	401-04-2002		/ /		1.62
			DELTAEMP DED PAYDAY 01/19/2023	401-06-2002		/ /		5.83
			DELTAEMP DED PAYDAY 01/19/2023	401-07-2002		/ /		1.62
			DELTAEMP DED PAYDAY 01/19/2023	401-08-2002		/ /		4.86
			DELTAEMP DED PAYDAY 01/19/2023	401-09-2002		/ /		9.72

CK#	DATE	Name	Description	Line Item	Invoice #	DATE	PO #	Amount
			DELTAEMP DED PAYDAY 01/19/2023	402-50-2002		/ /		6.08
			DELTAEMP DED PAYDAY 01/19/2023	405-67-2002		/ /		.40
			DELTAEMP DED PAYDAY 01/19/2023	422-66-2002		/ /		.65
			DELTAEMP DED PAYDAY 01/19/2023	510-37-2002		/ /		1.62
			DELTAEMP DED PAYDAY 01/19/2023	634-32-2002		/ /		9.72
			DELTAEMP MATCH PAYDAY 01/19/2023	401-01-2660		/ /		43.65
			DELTAEMP MATCH PAYDAY 01/19/2023	401-02-2660		/ /		14.55
			DELTAEMP MATCH PAYDAY 01/19/2023	401-04-2660		/ /		14.55
			DELTAEMP MATCH PAYDAY 01/19/2023	401-06-2660		/ /		52.38
			DELTAEMP MATCH PAYDAY 01/19/2023	401-07-2660		/ /		14.55
			DELTAEMP MATCH PAYDAY 01/19/2023	401-08-2660		/ /		43.65
			DELTAEMP MATCH PAYDAY 01/19/2023	401-09-2660		/ /		87.30
			DELTAEMP MATCH PAYDAY 01/19/2023	402-50-2660		/ /		54.56
			DELTAEMP MATCH PAYDAY 01/19/2023	405-67-2660		/ /		3.64
			DELTAEMP MATCH PAYDAY 01/19/2023	422-66-2660		/ /		5.82
			DELTAEMP MATCH PAYDAY 01/19/2023	510-37-2660		/ /		14.55
			DELTAEMP MATCH PAYDAY 01/19/2023	634-32-2660		/ /		87.30
			DELTAFAM DED PAYDAY 01/19/2023	401-01-2002		/ /		4.85
			DELTAFAM DED PAYDAY 01/19/2023	401-02-2002		/ /		4.85
			DELTAFAM DED PAYDAY 01/19/2023	401-04-2001		/ /		4.85
			DELTAFAM DED PAYDAY 01/19/2023	401-04-2002		/ /		4.85
			DELTAFAM DED PAYDAY 01/19/2023	401-06-2001		/ /		4.85
			DELTAFAM DED PAYDAY 01/19/2023	401-07-2002		/ /		4.85
			DELTAFAM DED PAYDAY 01/19/2023	401-08-2001		/ /		4.85
			DELTAFAM DED PAYDAY 01/19/2023	401-08-2002		/ /		19.40
			DELTAFAM DED PAYDAY 01/19/2023	634-32-2002		/ /		9.70
			DELTAFAM MATCH PAYDAY 01/19/2023	401-01-2660		/ /		43.63
			DELTAFAM MATCH PAYDAY 01/19/2023	401-02-2660		/ /		43.63
			DELTAFAM MATCH PAYDAY 01/19/2023	401-04-2660		/ /		87.26
			DELTAFAM MATCH PAYDAY 01/19/2023	401-06-2660		/ /		43.63
			DELTAFAM MATCH PAYDAY 01/19/2023	401-07-2660		/ /		43.63
			DELTAFAM MATCH PAYDAY 01/19/2023	401-08-2660		/ /		218.15
			DELTAFAM MATCH PAYDAY 01/19/2023	634-32-2660		/ /		87.26
			DELTASCH DED PAYDAY 01/19/2023	401-01-2002		/ /		3.72
			DELTASCH DED PAYDAY 01/19/2023	402-50-2002		/ /		3.72
			DELTASCH DED PAYDAY 01/19/2023	634-32-2002		/ /		7.44
			DELTASCH MATCH PAYDAY 01/19/2023	401-01-2660		/ /		33.45
			DELTASCH MATCH PAYDAY 01/19/2023	402-50-2660		/ /		33.45
			DELTASCH MATCH PAYDAY 01/19/2023	634-32-2660		/ /		66.90
			DISABILI DED PAYDAY 01/19/2023	401-00-2001		/ /		4.94
			DISABILI DED PAYDAY 01/19/2023	401-01-2002		/ /		24.70
			DISABILI DED PAYDAY 01/19/2023	401-02-2002		/ /		9.88
			DISABILI DED PAYDAY 01/19/2023	401-04-2001		/ /		4.94
			DISABILI DED PAYDAY 01/19/2023	401-04-2002		/ /		14.82
			DISABILI DED PAYDAY 01/19/2023	401-06-2002		/ /		10.96
			DISABILI DED PAYDAY 01/19/2023	401-07-2001		/ /		4.94
			DISABILI DED PAYDAY 01/19/2023	401-07-2002		/ /		4.94
			DISABILI DED PAYDAY 01/19/2023	401-08-2001		/ /		4.94
			DISABILI DED PAYDAY 01/19/2023	401-08-2002		/ /		34.58
			DISABILI DED PAYDAY 01/19/2023	401-09-2002		/ /		19.76
			DISABILI DED PAYDAY 01/19/2023	401-09-2004		/ /		4.94
			DISABILI DED PAYDAY 01/19/2023	402-50-2002		/ /		32.61
			DISABILI DED PAYDAY 01/19/2023	405-67-2002		/ /		1.97
			DISABILI DED PAYDAY 01/19/2023	422-66-2002		/ /		3.86
			DISABILI DED PAYDAY 01/19/2023	500-48-2002		/ /		4.94
			DISABILI DED PAYDAY 01/19/2023	500-49-2002		/ /		4.94
			DISABILI DED PAYDAY 01/19/2023	510-37-2002		/ /		4.94
			DISABILI DED PAYDAY 01/19/2023	629-03-2002		/ /		4.94
			DISABILI DED PAYDAY 01/19/2023	634-32-2002		/ /		24.70

CK#	DATE	Name	Description	Line Item	Invoice #	DATE	PO #	Amount
			INSFEE DED PAYDAY 01/19/2023	401-00-2001		/ /		.07
			INSFEE DED PAYDAY 01/19/2023	401-01-2002		/ /		.42
			INSFEE DED PAYDAY 01/19/2023	401-02-2002		/ /		.21
			INSFEE DED PAYDAY 01/19/2023	401-04-2001		/ /		.07
			INSFEE DED PAYDAY 01/19/2023	401-04-2002		/ /		.28
			INSFEE DED PAYDAY 01/19/2023	401-06-2001		/ /		.07
			INSFEE DED PAYDAY 01/19/2023	401-06-2002		/ /		.43
			INSFEE DED PAYDAY 01/19/2023	401-07-2001		/ /		.07
			INSFEE DED PAYDAY 01/19/2023	401-07-2002		/ /		.28
			INSFEE DED PAYDAY 01/19/2023	401-08-2001		/ /		.07
			INSFEE DED PAYDAY 01/19/2023	401-08-2002		/ /		.91
			INSFEE DED PAYDAY 01/19/2023	401-09-2002		/ /		.70
			INSFEE DED PAYDAY 01/19/2023	401-09-2004		/ /		.07
			INSFEE DED PAYDAY 01/19/2023	402-50-2002		/ /		.68
			INSFEE DED PAYDAY 01/19/2023	405-67-2002		/ /		.02
			INSFEE DED PAYDAY 01/19/2023	422-66-2002		/ /		.06
			INSFEE DED PAYDAY 01/19/2023	500-48-2002		/ /		.07
			INSFEE DED PAYDAY 01/19/2023	500-49-2002		/ /		.07
			INSFEE DED PAYDAY 01/19/2023	510-37-2002		/ /		.07
			INSFEE DED PAYDAY 01/19/2023	629-03-2002		/ /		.14
			INSFEE DED PAYDAY 01/19/2023	634-32-2002		/ /		.84
			INSFEE MATCH PAYDAY 01/19/2023	401-00-2660		/ /		.62
			INSFEE MATCH PAYDAY 01/19/2023	401-01-2660		/ /		3.72
			INSFEE MATCH PAYDAY 01/19/2023	401-02-2660		/ /		1.86
			INSFEE MATCH PAYDAY 01/19/2023	401-04-2660		/ /		3.10
			INSFEE MATCH PAYDAY 01/19/2023	401-06-2660		/ /		4.25
			INSFEE MATCH PAYDAY 01/19/2023	401-07-2660		/ /		3.10
			INSFEE MATCH PAYDAY 01/19/2023	401-08-2660		/ /		8.68
			INSFEE MATCH PAYDAY 01/19/2023	401-09-2660		/ /		6.82
			INSFEE MATCH PAYDAY 01/19/2023	402-50-2660		/ /		5.95
			INSFEE MATCH PAYDAY 01/19/2023	405-67-2660		/ /		.25
			INSFEE MATCH PAYDAY 01/19/2023	422-66-2660		/ /		.71
			INSFEE MATCH PAYDAY 01/19/2023	500-48-2660		/ /		.62
			INSFEE MATCH PAYDAY 01/19/2023	500-49-2660		/ /		.62
			INSFEE MATCH PAYDAY 01/19/2023	510-37-2660		/ /		.62
			INSFEE MATCH PAYDAY 01/19/2023	629-03-2660		/ /		1.24
			INSFEE MATCH PAYDAY 01/19/2023	634-32-2660		/ /		7.44
			PRESBCPL DED PAYDAY 01/19/2023	401-06-2002		/ /		36.83
			PRESBCPL DED PAYDAY 01/19/2023	401-07-2001		/ /		60.45
			PRESBCPL DED PAYDAY 01/19/2023	401-07-2002		/ /		120.90
			PRESBCPL DED PAYDAY 01/19/2023	401-08-2002		/ /		60.45
			PRESBCPL DED PAYDAY 01/19/2023	401-09-2002		/ /		60.45
			PRESBCPL DED PAYDAY 01/19/2023	401-09-2004		/ /		60.45
			PRESBCPL DED PAYDAY 01/19/2023	402-50-2002		/ /		60.45
			PRESBCPL DED PAYDAY 01/19/2023	422-66-2002		/ /		23.62
			PRESBCPL MATCH PAYDAY 01/19/2023	401-06-2660		/ /		331.85
			PRESBCPL MATCH PAYDAY 01/19/2023	401-07-2660		/ /		1632.03
			PRESBCPL MATCH PAYDAY 01/19/2023	401-08-2660		/ /		544.01
			PRESBCPL MATCH PAYDAY 01/19/2023	401-09-2660		/ /		1088.02
			PRESBCPL MATCH PAYDAY 01/19/2023	402-50-2660		/ /		544.01
			PRESBCPL MATCH PAYDAY 01/19/2023	422-66-2660		/ /		212.16
			PRESBEMP DED PAYDAY 01/19/2023	401-01-2002		/ /		26.87
			PRESBEMP DED PAYDAY 01/19/2023	401-02-2002		/ /		26.87
			PRESBEMP DED PAYDAY 01/19/2023	401-04-2002		/ /		26.87
			PRESBEMP DED PAYDAY 01/19/2023	401-06-2002		/ /		26.87
			PRESBEMP DED PAYDAY 01/19/2023	401-08-2002		/ /		26.87
			PRESBEMP DED PAYDAY 01/19/2023	401-09-2002		/ /		53.74
			PRESBEMP DED PAYDAY 01/19/2023	510-37-2002		/ /		26.87
			PRESBEMP DED PAYDAY 01/19/2023	634-32-2002		/ /		26.87

CK#	DATE	Name	Description	Line Item	Invoice #	DATE	PO #	Amount
			PRESBEMP MATCH PAYDAY 01/19/2023	401-01-2660		/ /		241.77
			PRESBEMP MATCH PAYDAY 01/19/2023	401-02-2660		/ /		241.77
			PRESBEMP MATCH PAYDAY 01/19/2023	401-04-2660		/ /		241.77
			PRESBEMP MATCH PAYDAY 01/19/2023	401-06-2660		/ /		241.77
			PRESBEMP MATCH PAYDAY 01/19/2023	401-08-2660		/ /		241.77
			PRESBEMP MATCH PAYDAY 01/19/2023	401-09-2660		/ /		483.54
			PRESBEMP MATCH PAYDAY 01/19/2023	510-37-2660		/ /		241.77
			PRESBEMP MATCH PAYDAY 01/19/2023	634-32-2660		/ /		241.77
			PRESBFAM DED PAYDAY 01/19/2023	401-04-2001		/ /		79.26
			PRESBFAM DED PAYDAY 01/19/2023	401-04-2002		/ /		79.26
			PRESBFAM DED PAYDAY 01/19/2023	401-06-2001		/ /		79.26
			PRESBFAM DED PAYDAY 01/19/2023	401-08-2001		/ /		79.26
			PRESBFAM DED PAYDAY 01/19/2023	401-08-2002		/ /		79.26
			PRESBFAM MATCH PAYDAY 01/19/2023	401-04-2660		/ /		1426.50
			PRESBFAM MATCH PAYDAY 01/19/2023	401-06-2660		/ /		713.25
			PRESBFAM MATCH PAYDAY 01/19/2023	401-08-2660		/ /		1426.50
			PRESSNCK DED PAYDAY 01/19/2023	634-32-2002		/ /		48.36
			PRESSNCK MATCH PAYDAY 01/19/2023	634-32-2660		/ /		435.21
			VISCOUPL DED PAYDAY 01/19/2023	401-00-2001		/ /		.57
			VISCOUPL DED PAYDAY 01/19/2023	401-04-2002		/ /		.57
			VISCOUPL DED PAYDAY 01/19/2023	401-06-2002		/ /		1.25
			VISCOUPL DED PAYDAY 01/19/2023	401-07-2001		/ /		.57
			VISCOUPL DED PAYDAY 01/19/2023	401-07-2002		/ /		1.14
			VISCOUPL DED PAYDAY 01/19/2023	401-08-2002		/ /		3.42
			VISCOUPL DED PAYDAY 01/19/2023	401-09-2002		/ /		.57
			VISCOUPL DED PAYDAY 01/19/2023	401-09-2004		/ /		.57
			VISCOUPL DED PAYDAY 01/19/2023	402-50-2002		/ /		2.19
			VISCOUPL DED PAYDAY 01/19/2023	405-67-2002		/ /		.09
			VISCOUPL DED PAYDAY 01/19/2023	422-66-2002		/ /		.46
			VISCOUPL DED PAYDAY 01/19/2023	500-48-2002		/ /		.57
			VISCOUPL DED PAYDAY 01/19/2023	634-32-2002		/ /		.57
			VISCOUPL MATCH PAYDAY 01/19/2023	401-00-2660		/ /		5.09
			VISCOUPL MATCH PAYDAY 01/19/2023	401-04-2660		/ /		5.09
			VISCOUPL MATCH PAYDAY 01/19/2023	401-06-2660		/ /		11.30
			VISCOUPL MATCH PAYDAY 01/19/2023	401-07-2660		/ /		15.27
			VISCOUPL MATCH PAYDAY 01/19/2023	401-08-2660		/ /		30.54
			VISCOUPL MATCH PAYDAY 01/19/2023	401-09-2660		/ /		10.18
			VISCOUPL MATCH PAYDAY 01/19/2023	402-50-2660		/ /		19.60
			VISCOUPL MATCH PAYDAY 01/19/2023	405-67-2660		/ /		.76
			VISCOUPL MATCH PAYDAY 01/19/2023	422-66-2660		/ /		3.97
			VISCOUPL MATCH PAYDAY 01/19/2023	500-48-2660		/ /		5.09
			VISCOUPL MATCH PAYDAY 01/19/2023	634-32-2660		/ /		5.09
			VISINFAM DED PAYDAY 01/19/2023	401-01-2002		/ /		.84
			VISINFAM DED PAYDAY 01/19/2023	401-02-2002		/ /		.84
			VISINFAM DED PAYDAY 01/19/2023	401-04-2001		/ /		.84
			VISINFAM DED PAYDAY 01/19/2023	401-04-2002		/ /		.84
			VISINFAM DED PAYDAY 01/19/2023	401-06-2001		/ /		.84
			VISINFAM DED PAYDAY 01/19/2023	401-07-2002		/ /		.84
			VISINFAM DED PAYDAY 01/19/2023	401-08-2001		/ /		.84
			VISINFAM DED PAYDAY 01/19/2023	401-08-2002		/ /		3.36
			VISINFAM DED PAYDAY 01/19/2023	634-32-2002		/ /		1.68
			VISINFAM MATCH PAYDAY 01/19/2023	401-01-2660		/ /		7.49
			VISINFAM MATCH PAYDAY 01/19/2023	401-02-2660		/ /		7.49
			VISINFAM MATCH PAYDAY 01/19/2023	401-04-2660		/ /		14.98
			VISINFAM MATCH PAYDAY 01/19/2023	401-06-2660		/ /		7.49
			VISINFAM MATCH PAYDAY 01/19/2023	401-07-2660		/ /		7.49
			VISINFAM MATCH PAYDAY 01/19/2023	401-08-2660		/ /		37.45
			VISINFAM MATCH PAYDAY 01/19/2023	634-32-2660		/ /		14.98
			VISIONEM DED PAYDAY 01/19/2023	401-01-2002		/ /		1.20

CK#	DATE	Name	Description	Line Item	Invoice #	DATE	PO #	Amount
			VISIONEM DED PAYDAY 01/19/2023	401-02-2002		/ /		.30
			VISIONEM DED PAYDAY 01/19/2023	401-04-2002		/ /		.30
			VISIONEM DED PAYDAY 01/19/2023	401-06-2002		/ /		1.08
			VISIONEM DED PAYDAY 01/19/2023	401-07-2002		/ /		.30
			VISIONEM DED PAYDAY 01/19/2023	401-08-2002		/ /		.90
			VISIONEM DED PAYDAY 01/19/2023	401-09-2002		/ /		2.10
			VISIONEM DED PAYDAY 01/19/2023	402-50-2002		/ /		1.12
			VISIONEM DED PAYDAY 01/19/2023	405-67-2002		/ /		.08
			VISIONEM DED PAYDAY 01/19/2023	422-66-2002		/ /		.12
			VISIONEM DED PAYDAY 01/19/2023	510-37-2002		/ /		.30
			VISIONEM DED PAYDAY 01/19/2023	634-32-2002		/ /		1.80
			VISIONEM MATCH PAYDAY 01/19/2023	401-01-2660		/ /		10.80
			VISIONEM MATCH PAYDAY 01/19/2023	401-02-2660		/ /		2.70
			VISIONEM MATCH PAYDAY 01/19/2023	401-04-2660		/ /		2.70
			VISIONEM MATCH PAYDAY 01/19/2023	401-06-2660		/ /		9.72
			VISIONEM MATCH PAYDAY 01/19/2023	401-07-2660		/ /		2.70
			VISIONEM MATCH PAYDAY 01/19/2023	401-08-2660		/ /		8.10
			VISIONEM MATCH PAYDAY 01/19/2023	401-09-2660		/ /		18.90
			VISIONEM MATCH PAYDAY 01/19/2023	402-50-2660		/ /		10.13
			VISIONEM MATCH PAYDAY 01/19/2023	405-67-2660		/ /		.67
			VISIONEM MATCH PAYDAY 01/19/2023	422-66-2660		/ /		1.08
			VISIONEM MATCH PAYDAY 01/19/2023	510-37-2660		/ /		2.70
			VISIONEM MATCH PAYDAY 01/19/2023	634-32-2660		/ /		16.20
			VISSICHI DED PAYDAY 01/19/2023	401-01-2002		/ /		.66
			VISSICHI DED PAYDAY 01/19/2023	402-50-2002		/ /		.66
			VISSICHI DED PAYDAY 01/19/2023	634-32-2002		/ /		1.32
			VISSICHI MATCH PAYDAY 01/19/2023	401-01-2660		/ /		5.92
			VISSICHI MATCH PAYDAY 01/19/2023	402-50-2660		/ /		5.92
			VISSICHI MATCH PAYDAY 01/19/2023	634-32-2660		/ /		11.84
			BCBS HMO DED PAYDAY 02/02/2023	401-08-2002		/ /		128.54
			BCBS HMO DED PAYDAY 02/02/2023	402-50-2002		/ /		111.83
			BCBS HMO DED PAYDAY 02/02/2023	404-65-2002		/ /		11.16
			BCBS HMO DED PAYDAY 02/02/2023	405-67-2002		/ /		9.07
			BCBS HMO DED PAYDAY 02/02/2023	500-48-2002		/ /		60.45
			BCBS HMO DED PAYDAY 02/02/2023	634-32-2002		/ /		79.25
			BCBS HMO MATCH PAYDAY 02/02/2023	401-08-2660		/ /		1257.26
			BCBS HMO MATCH PAYDAY 02/02/2023	402-50-2660		/ /		1006.42
			BCBS HMO MATCH PAYDAY 02/02/2023	405-67-2660		/ /		81.60
			BCBS HMO MATCH PAYDAY 02/02/2023	500-48-2660		/ /		544.01
			BCBS HMO MATCH PAYDAY 02/02/2023	634-32-2660		/ /		713.25
			BCBSEMPP DED PAYDAY 02/02/2023	401-06-2002		/ /		62.50
			BCBSEMPP DED PAYDAY 02/02/2023	401-08-2002		/ /		58.10
			BCBSEMPP DED PAYDAY 02/02/2023	401-09-2002		/ /		62.50
			BCBSEMPP DED PAYDAY 02/02/2023	402-50-2002		/ /		117.19
			BCBSEMPP DED PAYDAY 02/02/2023	404-65-2002		/ /		4.40
			BCBSEMPP DED PAYDAY 02/02/2023	405-67-2002		/ /		7.81
			BCBSEMPP DED PAYDAY 02/02/2023	634-32-2002		/ /		156.25
			BCBSEMPP MATCH PAYDAY 02/02/2023	401-06-2660		/ /		562.36
			BCBSEMPP MATCH PAYDAY 02/02/2023	401-08-2660		/ /		562.36
			BCBSEMPP MATCH PAYDAY 02/02/2023	401-09-2660		/ /		562.36
			BCBSEMPP MATCH PAYDAY 02/02/2023	402-50-2660		/ /		1054.42
			BCBSEMPP MATCH PAYDAY 02/02/2023	405-67-2660		/ /		70.30
			BCBSEMPP MATCH PAYDAY 02/02/2023	634-32-2660		/ /		1405.90
			BCBSFMPP DED PAYDAY 02/02/2023	401-01-2002		/ /		92.18
			BCBSFMPP DED PAYDAY 02/02/2023	401-07-2002		/ /		92.18
			BCBSFMPP DED PAYDAY 02/02/2023	401-08-2002		/ /		82.63
			BCBSFMPP DED PAYDAY 02/02/2023	404-65-2002		/ /		9.55
			BCBSFMPP DED PAYDAY 02/02/2023	634-32-2002		/ /		92.18
			BCBSFMPP MATCH PAYDAY 02/02/2023	401-01-2660		/ /		829.56

CK#	DATE	Name	Description	Line Item	Invoice #	DATE	PO #	Amount
			BCBSFMPP MATCH PAYDAY 02/02/2023	401-07-2660		/ /		829.56
			BCBSFMPP MATCH PAYDAY 02/02/2023	401-08-2660		/ /		829.56
			BCBSFMPP MATCH PAYDAY 02/02/2023	634-32-2660		/ /		829.56
			BCBSHMO DED PAYDAY 02/02/2023	401-01-2002		/ /		53.74
			BCBSHMO DED PAYDAY 02/02/2023	401-06-2002		/ /		16.02
			BCBSHMO DED PAYDAY 02/02/2023	401-09-2002		/ /		134.35
			BCBSHMO DED PAYDAY 02/02/2023	422-66-2002		/ /		10.85
			BCBSHMO DED PAYDAY 02/02/2023	634-32-2002		/ /		26.87
			BCBSHMO MATCH PAYDAY 02/02/2023	401-01-2660		/ /		483.54
			BCBSHMO MATCH PAYDAY 02/02/2023	401-06-2660		/ /		144.16
			BCBSHMO MATCH PAYDAY 02/02/2023	401-09-2660		/ /		1208.85
			BCBSHMO MATCH PAYDAY 02/02/2023	422-66-2660		/ /		97.61
			BCBSHMO MATCH PAYDAY 02/02/2023	634-32-2660		/ /		241.77
			BCBSSICH DED PAYDAY 02/02/2023	401-01-2002		/ /		56.24
			BCBSSICH DED PAYDAY 02/02/2023	402-50-2002		/ /		56.24
			BCBSSICH DED PAYDAY 02/02/2023	634-32-2002		/ /		56.24
			BCBSSICH MATCH PAYDAY 02/02/2023	401-01-2660		/ /		506.15
			BCBSSICH MATCH PAYDAY 02/02/2023	402-50-2660		/ /		506.15
			BCBSSICH MATCH PAYDAY 02/02/2023	634-32-2660		/ /		506.15
			BCBSSPPO DED PAYDAY 02/02/2023	401-01-2002		/ /		70.30
			BCBSSPPO DED PAYDAY 02/02/2023	401-04-2002		/ /		70.30
			BCBSSPPO DED PAYDAY 02/02/2023	401-08-2002		/ /		140.60
			BCBSSPPO DED PAYDAY 02/02/2023	402-50-2002		/ /		70.30
			BCBSSPPO DED PAYDAY 02/02/2023	629-03-2002		/ /		70.30
			BCBSSPPO DED PAYDAY 02/02/2023	634-32-2002		/ /		70.30
			BCBSSPPO MATCH PAYDAY 02/02/2023	401-01-2660		/ /		632.70
			BCBSSPPO MATCH PAYDAY 02/02/2023	401-04-2660		/ /		632.70
			BCBSSPPO MATCH PAYDAY 02/02/2023	401-08-2660		/ /		1265.40
			BCBSSPPO MATCH PAYDAY 02/02/2023	402-50-2660		/ /		632.70
			BCBSSPPO MATCH PAYDAY 02/02/2023	629-03-2660		/ /		632.70
			BCBSSPPO MATCH PAYDAY 02/02/2023	634-32-2660		/ /		632.70
			DELTACPL DED PAYDAY 02/02/2023	401-00-2001		/ /		3.23
			DELTACPL DED PAYDAY 02/02/2023	401-01-2002		/ /		3.23
			DELTACPL DED PAYDAY 02/02/2023	401-04-2002		/ /		3.23
			DELTACPL DED PAYDAY 02/02/2023	401-06-2002		/ /		7.07
			DELTACPL DED PAYDAY 02/02/2023	401-07-2001		/ /		3.23
			DELTACPL DED PAYDAY 02/02/2023	401-07-2002		/ /		6.46
			DELTACPL DED PAYDAY 02/02/2023	401-08-2002		/ /		18.93
			DELTACPL DED PAYDAY 02/02/2023	401-09-2002		/ /		3.23
			DELTACPL DED PAYDAY 02/02/2023	401-09-2004		/ /		3.23
			DELTACPL DED PAYDAY 02/02/2023	402-50-2002		/ /		12.44
			DELTACPL DED PAYDAY 02/02/2023	404-65-2002		/ /		.45
			DELTACPL DED PAYDAY 02/02/2023	405-67-2002		/ /		.48
			DELTACPL DED PAYDAY 02/02/2023	422-66-2002		/ /		2.62
			DELTACPL DED PAYDAY 02/02/2023	500-48-2002		/ /		3.23
			DELTACPL DED PAYDAY 02/02/2023	629-03-2002		/ /		3.23
			DELTACPL DED PAYDAY 02/02/2023	634-32-2002		/ /		3.23
			DELTACPL MATCH PAYDAY 02/02/2023	401-00-2660		/ /		29.07
			DELTACPL MATCH PAYDAY 02/02/2023	401-01-2660		/ /		29.07
			DELTACPL MATCH PAYDAY 02/02/2023	401-04-2660		/ /		29.07
			DELTACPL MATCH PAYDAY 02/02/2023	401-06-2660		/ /		63.70
			DELTACPL MATCH PAYDAY 02/02/2023	401-07-2660		/ /		87.21
			DELTACPL MATCH PAYDAY 02/02/2023	401-08-2660		/ /		174.42
			DELTACPL MATCH PAYDAY 02/02/2023	401-09-2660		/ /		58.14
			DELTACPL MATCH PAYDAY 02/02/2023	402-50-2660		/ /		111.92
			DELTACPL MATCH PAYDAY 02/02/2023	405-67-2660		/ /		4.36
			DELTACPL MATCH PAYDAY 02/02/2023	422-66-2660		/ /		23.51
			DELTACPL MATCH PAYDAY 02/02/2023	500-48-2660		/ /		29.07
			DELTACPL MATCH PAYDAY 02/02/2023	629-03-2660		/ /		29.07

CK#	DATE	Name	Description	Line Item	Invoice #	DATE	PO #	Amount
			DELTACPL MATCH PAYDAY 02/02/2023	634-32-2660		/ /		29.07
			DELTAEMP DED PAYDAY 02/02/2023	401-01-2002		/ /		4.86
			DELTAEMP DED PAYDAY 02/02/2023	401-02-2002		/ /		1.62
			DELTAEMP DED PAYDAY 02/02/2023	401-04-2002		/ /		1.62
			DELTAEMP DED PAYDAY 02/02/2023	401-06-2002		/ /		5.83
			DELTAEMP DED PAYDAY 02/02/2023	401-07-2002		/ /		1.62
			DELTAEMP DED PAYDAY 02/02/2023	401-08-2002		/ /		4.63
			DELTAEMP DED PAYDAY 02/02/2023	401-09-2002		/ /		9.72
			DELTAEMP DED PAYDAY 02/02/2023	402-50-2002		/ /		6.08
			DELTAEMP DED PAYDAY 02/02/2023	404-65-2002		/ /		.23
			DELTAEMP DED PAYDAY 02/02/2023	405-67-2002		/ /		.40
			DELTAEMP DED PAYDAY 02/02/2023	422-66-2002		/ /		.65
			DELTAEMP DED PAYDAY 02/02/2023	510-37-2002		/ /		1.62
			DELTAEMP DED PAYDAY 02/02/2023	634-32-2002		/ /		9.72
			DELTAEMP MATCH PAYDAY 02/02/2023	401-01-2660		/ /		43.65
			DELTAEMP MATCH PAYDAY 02/02/2023	401-02-2660		/ /		14.55
			DELTAEMP MATCH PAYDAY 02/02/2023	401-04-2660		/ /		14.55
			DELTAEMP MATCH PAYDAY 02/02/2023	401-06-2660		/ /		52.33
			DELTAEMP MATCH PAYDAY 02/02/2023	401-07-2660		/ /		14.55
			DELTAEMP MATCH PAYDAY 02/02/2023	401-08-2660		/ /		43.65
			DELTAEMP MATCH PAYDAY 02/02/2023	401-09-2660		/ /		87.30
			DELTAEMP MATCH PAYDAY 02/02/2023	402-50-2660		/ /		54.56
			DELTAEMP MATCH PAYDAY 02/02/2023	405-67-2660		/ /		3.64
			DELTAEMP MATCH PAYDAY 02/02/2023	422-66-2660		/ /		5.87
			DELTAEMP MATCH PAYDAY 02/02/2023	510-37-2660		/ /		14.55
			DELTAEMP MATCH PAYDAY 02/02/2023	634-32-2660		/ /		87.30
			DELTAFAM DED PAYDAY 02/02/2023	401-01-2002		/ /		4.85
			DELTAFAM DED PAYDAY 02/02/2023	401-02-2002		/ /		4.85
			DELTAFAM DED PAYDAY 02/02/2023	401-04-2001		/ /		4.85
			DELTAFAM DED PAYDAY 02/02/2023	401-04-2002		/ /		4.85
			DELTAFAM DED PAYDAY 02/02/2023	401-06-2001		/ /		4.85
			DELTAFAM DED PAYDAY 02/02/2023	401-07-2002		/ /		4.85
			DELTAFAM DED PAYDAY 02/02/2023	401-08-2001		/ /		4.85
			DELTAFAM DED PAYDAY 02/02/2023	401-08-2002		/ /		13.60
			DELTAFAM DED PAYDAY 02/02/2023	404-65-2002		/ /		.95
			DELTAFAM DED PAYDAY 02/02/2023	634-32-2002		/ /		9.70
			DELTAFAM MATCH PAYDAY 02/02/2023	401-01-2660		/ /		43.63
			DELTAFAM MATCH PAYDAY 02/02/2023	401-02-2660		/ /		43.63
			DELTAFAM MATCH PAYDAY 02/02/2023	401-04-2660		/ /		87.26
			DELTAFAM MATCH PAYDAY 02/02/2023	401-06-2660		/ /		43.63
			DELTAFAM MATCH PAYDAY 02/02/2023	401-07-2660		/ /		43.63
			DELTAFAM MATCH PAYDAY 02/02/2023	401-08-2660		/ /		174.52
			DELTAFAM MATCH PAYDAY 02/02/2023	634-32-2660		/ /		87.26
			DELTASCH DED PAYDAY 02/02/2023	401-01-2002		/ /		3.72
			DSLTASCH DED PAYDAY 02/02/2023	402-50-2002		/ /		3.72
			DELTASCH DED PAYDAY 02/02/2023	634-32-2002		/ /		7.44
			DELTASCH MATCH PAYDAY 02/02/2023	401-01-2660		/ /		33.45
			DELTASCH MATCH PAYDAY 02/02/2023	402-50-2660		/ /		33.45
			DELTASCH MATCH PAYDAY 02/02/2023	634-32-2660		/ /		66.90
			DISABILI DED PAYDAY 02/02/2023	401-00-2001		/ /		4.94
			DISABILI DED PAYDAY 02/02/2023	401-01-2002		/ /		24.70
			DISABILI DED PAYDAY 02/02/2023	401-02-2002		/ /		9.88
			DISABILI DED PAYDAY 02/02/2023	401-04-2001		/ /		4.94
			DISABILI DED PAYDAY 02/02/2023	401-04-2002		/ /		14.82
			DISABILI DED PAYDAY 02/02/2023	401-06-2002		/ /		10.83
			DISABILI DED PAYDAY 02/02/2023	401-07-2001		/ /		4.94
			DISABILI DED PAYDAY 02/02/2023	401-07-2002		/ /		4.94
			DISABILI DED PAYDAY 02/02/2023	401-08-2001		/ /		4.94
			DISABILI DED PAYDAY 02/02/2023	401-08-2002		/ /		28.43

CK#	DATE	Name	Description	Line Item	Invoice #	DATE	PO #	Amount
			DISABILI DED PAYDAY 02/02/2023	401-09-2002		/ /		19.76
			DISABILI DED PAYDAY 02/02/2023	401-09-2004		/ /		4.94
			DISABILI DED PAYDAY 02/02/2023	402-50-2002		/ /		32.61
			DISABILI DED PAYDAY 02/02/2023	404-65-2002		/ /		1.21
			DISABILI DED PAYDAY 02/02/2023	405-67-2002		/ /		1.97
			DISABILI DED PAYDAY 02/02/2023	422-66-2002		/ /		3.99
			DISABILI DED PAYDAY 02/02/2023	500-48-2002		/ /		4.94
			DISABILI DED PAYDAY 02/02/2023	500-49-2002		/ /		4.94
			DISABILI DED PAYDAY 02/02/2023	510-37-2002		/ /		4.94
			DISABILI DED PAYDAY 02/02/2023	629-03-2002		/ /		4.94
			DISABILI DED PAYDAY 02/02/2023	634-32-2002		/ /		24.70
			INSFEE DED PAYDAY 02/02/2023	401-00-2001		/ /		.07
			INSFEE DED PAYDAY 02/02/2023	401-01-2002		/ /		.42
			INSFEE DED PAYDAY 02/02/2023	401-02-2002		/ /		.21
			INSFEE DED PAYDAY 02/02/2023	401-04-2001		/ /		.07
			INSFEE DED PAYDAY 02/02/2023	401-04-2002		/ /		.28
			INSFEE DED PAYDAY 02/02/2023	401-06-2001		/ /		.07
			INSFEE DED PAYDAY 02/02/2023	401-06-2002		/ /		.42
			INSFEE DED PAYDAY 02/02/2023	401-07-2001		/ /		.07
			INSFEE DED PAYDAY 02/02/2023	401-07-2002		/ /		.28
			INSFEE DED PAYDAY 02/02/2023	401-08-2001		/ /		.07
			INSFEE DED PAYDAY 02/02/2023	401-08-2002		/ /		.81
			INSFEE DED PAYDAY 02/02/2023	401-09-2002		/ /		.70
			INSFEE DED PAYDAY 02/02/2023	401-09-2004		/ /		.07
			INSFEE DED PAYDAY 02/02/2023	402-50-2002		/ /		.67
			INSFEE DED PAYDAY 02/02/2023	404-65-2002		/ /		.03
			INSFEE DED PAYDAY 02/02/2023	405-67-2002		/ /		.03
			INSFEE DED PAYDAY 02/02/2023	422-66-2002		/ /		.07
			INSFEE DED PAYDAY 02/02/2023	500-48-2002		/ /		.07
			INSFEE DED PAYDAY 02/02/2023	500-49-2002		/ /		.07
			INSFEE DED PAYDAY 02/02/2023	510-37-2002		/ /		.07
			INSFEE DED PAYDAY 02/02/2023	629-03-2002		/ /		.14
			INSFEE DED PAYDAY 02/02/2023	634-32-2002		/ /		.84
			INSFEE MATCH PAYDAY 02/02/2023	401-00-2660		/ /		.62
			INSFEE MATCH PAYDAY 02/02/2023	401-01-2660		/ /		3.72
			INSFEE MATCH PAYDAY 02/02/2023	401-02-2660		/ /		1.86
			INSFEE MATCH PAYDAY 02/02/2023	401-04-2660		/ /		3.10
			INSFEE MATCH PAYDAY 02/02/2023	401-06-2660		/ /		4.22
			INSFEE MATCH PAYDAY 02/02/2023	401-07-2660		/ /		3.10
			INSFEE MATCH PAYDAY 02/02/2023	401-08-2660		/ /		8.06
			INSFEE MATCH PAYDAY 02/02/2023	401-09-2660		/ /		6.82
			INSFEE MATCH PAYDAY 02/02/2023	402-50-2660		/ /		5.95
			INSFEE MATCH PAYDAY 02/02/2023	405-67-2660		/ /		.25
			INSFEE MATCH PAYDAY 02/02/2023	422-66-2660		/ /		.74
			INSFEE MATCH PAYDAY 02/02/2023	500-48-2660		/ /		.62
			INSFEE MATCH PAYDAY 02/02/2023	500-49-2660		/ /		.62
			INSFEE MATCH PAYDAY 02/02/2023	510-37-2660		/ /		.62
			INSFEE MATCH PAYDAY 02/02/2023	629-03-2660		/ /		1.24
			INSFEE MATCH PAYDAY 02/02/2023	634-32-2660		/ /		7.44
			PRESBCPL DED PAYDAY 02/02/2023	401-06-2002		/ /		36.27
			PRESBCPL DED PAYDAY 02/02/2023	401-07-2001		/ /		60.45
			PRESBCPL DED PAYDAY 02/02/2023	401-07-2002		/ /		120.90
			PRESBCPL DED PAYDAY 02/02/2023	401-08-2002		/ /		60.45
			PRESBCPL DED PAYDAY 02/02/2023	401-09-2002		/ /		60.45
			PRESBCPL DED PAYDAY 02/02/2023	401-09-2004		/ /		60.45
			PRESBCPL DED PAYDAY 02/02/2023	402-50-2002		/ /		24.18
			PRESBCPL DED PAYDAY 02/02/2023	422-66-2002		/ /		326.42
			PRESBCPL MATCH PAYDAY 02/02/2023	401-06-2660		/ /		1632.03
			PRESBCPL MATCH PAYDAY 02/02/2023	401-07-2660		/ /		

CK#	DATE	Name	Description	Line Item	Invoice #	DATE	PO #	Amount
			PRESBCPL MATCH PAYDAY 02/02/2023	401-08-2660		/ /		544.01
			PRESBCPL MATCH PAYDAY 02/02/2023	401-09-2660		/ /		1088.02
			PRESBCPL MATCH PAYDAY 02/02/2023	402-50-2660		/ /		544.01
			PRESBCPL MATCH PAYDAY 02/02/2023	422-66-2660		/ /		217.59
			PRESBEMP DED PAYDAY 02/02/2023	401-01-2002		/ /		26.87
			PRESBEMP DED PAYDAY 02/02/2023	401-02-2002		/ /		26.87
			PRESBEMP DED PAYDAY 02/02/2023	401-04-2002		/ /		26.87
			PRESBEMP DED PAYDAY 02/02/2023	401-06-2002		/ /		26.87
			PRESBEMP DED PAYDAY 02/02/2023	401-08-2002		/ /		26.87
			PRESBEMP DED PAYDAY 02/02/2023	401-09-2002		/ /		53.74
			PRESBEMP DED PAYDAY 02/02/2023	510-37-2002		/ /		26.87
			PRESBEMP DED PAYDAY 02/02/2023	634-32-2002		/ /		26.87
			PRESBEMP MATCH PAYDAY 02/02/2023	401-01-2660		/ /		241.77
			PRESBEMP MATCH PAYDAY 02/02/2023	401-02-2660		/ /		241.77
			PRESBEMP MATCH PAYDAY 02/02/2023	401-04-2660		/ /		241.77
			PRESBEMP MATCH PAYDAY 02/02/2023	401-06-2660		/ /		241.77
			PRESBEMP MATCH PAYDAY 02/02/2023	401-08-2660		/ /		241.77
			PRESBEMP MATCH PAYDAY 02/02/2023	401-09-2660		/ /		483.54
			PRESBEMP MATCH PAYDAY 02/02/2023	510-37-2660		/ /		241.77
			PRESBEMP MATCH PAYDAY 02/02/2023	634-32-2660		/ /		241.77
			PRESBFAM DED PAYDAY 02/02/2023	401-04-2001		/ /		79.26
			PRESBFAM DED PAYDAY 02/02/2023	401-04-2002		/ /		79.26
			PRESBFAM DED PAYDAY 02/02/2023	401-06-2001		/ /		79.26
			PRESBFAM DED PAYDAY 02/02/2023	401-08-2001		/ /		79.26
			PRESBFAM DED PAYDAY 02/02/2023	401-08-2002		/ /		79.26
			PRESBFAM MATCH PAYDAY 02/02/2023	401-04-2660		/ /		1426.50
			PRESBFAM MATCH PAYDAY 02/02/2023	401-06-2660		/ /		713.25
			PRESBFAM MATCH PAYDAY 02/02/2023	401-08-2660		/ /		1426.50
			PRESSNCH DED PAYDAY 02/02/2023	634-32-2002		/ /		48.36
			PRESSNCH MATCH PAYDAY 02/02/2023	634-32-2660		/ /		435.21
			VISCOUPL DED PAYDAY 02/02/2023	401-00-2001		/ /		.57
			VISCOUPL DED PAYDAY 02/02/2023	401-04-2002		/ /		.57
			VISCOUPL DED PAYDAY 02/02/2023	401-06-2002		/ /		1.25
			VISCOUPL DED PAYDAY 02/02/2023	401-07-2001		/ /		.57
			VISCOUPL DED PAYDAY 02/02/2023	401-07-2002		/ /		1.14
			VISCOUPL DED PAYDAY 02/02/2023	401-08-2002		/ /		3.34
			VISCOUPL DED PAYDAY 02/02/2023	401-09-2002		/ /		.57
			VISCOUPL DED PAYDAY 02/02/2023	401-09-2004		/ /		.57
			VISCOUPL DED PAYDAY 02/02/2023	402-50-2002		/ /		2.19
			VISCOUPL DED PAYDAY 02/02/2023	404-65-2002		/ /		.08
			VISCOUPL DED PAYDAY 02/02/2023	405-67-2002		/ /		.09
			VISCOUPL DED PAYDAY 02/02/2023	422-66-2002		/ /		.46
			VISCOUPL DED PAYDAY 02/02/2023	500-48-2002		/ /		.57
			VISCOUPL DED PAYDAY 02/02/2023	634-32-2002		/ /		.57
			VISCOUPL MATCH PAYDAY 02/02/2023	401-00-2660		/ /		5.09
			VISCOUPL MATCH PAYDAY 02/02/2023	401-04-2660		/ /		5.09
			VISCOUPL MATCH PAYDAY 02/02/2023	401-06-2660		/ /		11.16
			VISCOUPL MATCH PAYDAY 02/02/2023	401-07-2660		/ /		15.27
			VISCOUPL MATCH PAYDAY 02/02/2023	401-08-2660		/ /		30.54
			VISCOUPL MATCH PAYDAY 02/02/2023	401-09-2660		/ /		10.18
			VISCOUPL MATCH PAYDAY 02/02/2023	402-50-2660		/ /		19.60
			VISCOUPL MATCH PAYDAY 02/02/2023	405-67-2660		/ /		.76
			VISCOUPL MATCH PAYDAY 02/02/2023	422-66-2660		/ /		4.11
			VISCOUPL MATCH PAYDAY 02/02/2023	500-48-2660		/ /		5.09
			VISCOUPL MATCH PAYDAY 02/02/2023	634-32-2660		/ /		5.09
			VISINFAM DED PAYDAY 02/02/2023	401-01-2002		/ /		.84
			VISINFAM DED PAYDAY 02/02/2023	401-02-2002		/ /		.84
			VISINFAM DED PAYDAY 02/02/2023	401-04-2001		/ /		.84
			VISINFAM DED PAYDAY 02/02/2023	401-04-2002		/ /		.84

CK#	DATE	Name	Description	Line Item	Invoice #	DATE	PO #	Amount
			VISINFAM DED PAYDAY 02/02/2023	401-06-2001		/ /		.84
			VISINFAM DED PAYDAY 02/02/2023	401-07-2002		/ /		.84
			VISINFAM DED PAYDAY 02/02/2023	401-08-2001		/ /		.84
			VISINFAM DED PAYDAY 02/02/2023	401-08-2002		/ /		2.35
			VISINFAM DED PAYDAY 02/02/2023	404-65-2002		/ /		.17
			VISINFAM DED PAYDAY 02/02/2023	634-32-2002		/ /		1.68
			VISINFAM MATCH PAYDAY 02/02/2023	401-01-2660		/ /		7.49
			VISINFAM MATCH PAYDAY 02/02/2023	401-02-2660		/ /		7.49
			VISINFAM MATCH PAYDAY 02/02/2023	401-04-2660		/ /		14.98
			VISINFAM MATCH PAYDAY 02/02/2023	401-06-2660		/ /		7.49
			VISINFAM MATCH PAYDAY 02/02/2023	401-07-2660		/ /		7.49
			VISINFAM MATCH PAYDAY 02/02/2023	401-08-2660		/ /		29.96
			VISINFAM MATCH PAYDAY 02/02/2023	634-32-2660		/ /		14.98
			VISIONEM DED PAYDAY 02/02/2023	401-01-2002		/ /		1.20
			VISIONEM DED PAYDAY 02/02/2023	401-02-2002		/ /		.30
			VISIONEM DED PAYDAY 02/02/2023	401-04-2002		/ /		.30
			VISIONEM DED PAYDAY 02/02/2023	401-06-2002		/ /		1.08
			VISIONEM DED PAYDAY 02/02/2023	401-07-2002		/ /		.30
			VISIONEM DED PAYDAY 02/02/2023	401-08-2002		/ /		.86
			VISIONEM DED PAYDAY 02/02/2023	401-09-2002		/ /		2.10
			VISIONEM DED PAYDAY 02/02/2023	402-50-2002		/ /		1.12
			VISIONEM DED PAYDAY 02/02/2023	404-65-2002		/ /		.04
			VISIONEM DED PAYDAY 02/02/2023	405-67-2002		/ /		.08
			VISIONEM DED PAYDAY 02/02/2023	422-66-2002		/ /		.12
			VISIONEM DED PAYDAY 02/02/2023	510-37-2002		/ /		.10
			VISIONEM DED PAYDAY 02/02/2023	634-32-2002		/ /		1.80
			VISIONEM MATCH PAYDAY 02/02/2023	401-01-2660		/ /		10.80
			VISIONEM MATCH PAYDAY 02/02/2023	401-02-2660		/ /		2.70
			VISIONEM MATCH PAYDAY 02/02/2023	401-04-2660		/ /		2.70
			VISIONEM MATCH PAYDAY 02/02/2023	401-06-2660		/ /		9.71
			VISIONEM MATCH PAYDAY 02/02/2023	401-07-2660		/ /		2.70
			VISIONEM MATCH PAYDAY 02/02/2023	401-08-2660		/ /		8.10
			VISIONEM MATCH PAYDAY 02/02/2023	401-09-2660		/ /		18.90
			VISIONEM MATCH PAYDAY 02/02/2023	402-50-2660		/ /		10.13
			VISIONEM MATCH PAYDAY 02/02/2023	405-67-2660		/ /		.67
			VISIONEM MATCH PAYDAY 02/02/2023	422-66-2660		/ /		1.09
			VISIONEM MATCH PAYDAY 02/02/2023	510-37-2660		/ /		2.70
			VISIONEM MATCH PAYDAY 02/02/2023	634-32-2660		/ /		16.20
			VISSICHI DED PAYDAY 02/02/2023	401-01-2002		/ /		.66
			VISSICHI DED PAYDAY 02/02/2023	402-50-2002		/ /		.66
			VISSICHI DED PAYDAY 02/02/2023	634-32-2002		/ /		1.32
			VISSICHI MATCH PAYDAY 02/02/2023	401-01-2660		/ /		5.92
			VISSICHI MATCH PAYDAY 02/02/2023	402-50-2660		/ /		5.92
			VISSICHI MATCH PAYDAY 02/02/2023	634-32-2660		/ /		11.84

LAW ENFORCEMENT	15683.39	ROAD	8921.47	LANDFILL	363.01
RISE GRANT	1296.10	DISPATCH	11899.42	PROPERTY ASSESSMENTS	4874.88
DETENTION	7880.98	ADMINISTRATION	6430.52	TREASURERS	5876.62
REAPPRAISAL FUND	778.76	OFFICE OF COUNTY CLERK	5501.24	EMERGENCY MGMT SERVICE	1483.24
COMMISSIONERS	87.18	FACILITIES MANAGEMENT	713.14	DWI GRANT FUND	586.88
COSSAP FEDERAL GRANT	11.26	WHITE SANDS MISSLE RAN	28.27		

==========

03 R128015	ADMINISTRATIVE SERVICES DIVISION	STANDARD DED PAYDAY 01/19/2023	401-06-2001		/ /		16.60
402.33		STANDARD DED PAYDAY 01/19/2023	401-08-2002		/ /		1.52
02/03/2023		STANDARD DED PAYDAY 01/19/2023	401-09-2002		/ /		.84
		STANDARD MATCH PAYDAY 01/19/2023	401-00-2660		/ /		2.21
		STANDARD MATCH PAYDAY 01/19/2023	401-01-2660		/ /		14.91
		STANDARD MATCH PAYDAY 01/19/2023	401-02-2660		/ /		6.63
		STANDARD MATCH PAYDAY 01/19/2023	401-04-2660		/ /		11.05

CK#	DATE	Name	Description	Line Item	Invoice #	DATE	PO #	Amount
			STANDARD MATCH PAYDAY 01/19/2023	401-06-2660		/ /		15.06
			STANDARD MATCH PAYDAY 01/19/2023	401-07-2660		/ /		11.05
			STANDARD MATCH PAYDAY 01/19/2023	401-08-2660		/ /		28.73
			STANDARD MATCH PAYDAY 01/19/2023	401-09-2660		/ /		24.31
			STANDARD MATCH PAYDAY 01/19/2023	401-15-2660		/ /		2.21
			STANDARD MATCH PAYDAY 01/19/2023	402-50-2660		/ /		21.22
			STANDARD MATCH PAYDAY 01/19/2023	405-67-2660		/ /		.88
			STANDARD MATCH PAYDAY 01/19/2023	422-66-2660		/ /		2.62
			STANDARD MATCH PAYDAY 01/19/2023	500-48-2660		/ /		2.21
			STANDARD MATCH PAYDAY 01/19/2023	500-49-2660		/ /		2.21
			STANDARD MATCH PAYDAY 01/19/2023	508-39-2660		/ /		.56
			STANDARD MATCH PAYDAY 01/19/2023	509-38-2660		/ /		2.21
			STANDARD MATCH PAYDAY 01/19/2023	510-37-2660		/ /		2.21
			STANDARD MATCH PAYDAY 01/19/2023	629-03-2660		/ /		4.42
			STANDARD MATCH PAYDAY 01/19/2023	634-32-2660		/ /		26.52
			SUPP LIF MATCH PAYDAY 01/19/2023	401-09-2660		/ /		1.05
			SUPPLIFE DED PAYDAY 01/19/2023	401-06-2002		/ /		1.04
			STANDARD DED PAYDAY 02/02/2023	401-06-2001		/ /		16.60
			STANDARD DED PAYDAY 02/02/2023	401-08-2002		/ /		1.36
			STANDARD DED PAYDAY 02/02/2023	401-09-2002		/ /		.84
			STANDARD DED PAYDAY 02/02/2023	404-65-2002		/ /		.16
			STANDARD MATCH PAYDAY 02/02/2023	401-00-2660		/ /		2.21
			STANDARD MATCH PAYDAY 02/02/2023	401-01-2660		/ /		14.92
			STANDARD MATCH PAYDAY 02/02/2023	401-02-2660		/ /		6.63
			STANDARD MATCH PAYDAY 02/02/2023	401-04-2660		/ /		11.05
			STANDARD MATCH PAYDAY 02/02/2023	401-06-2660		/ /		15.00
			STANDARD MATCH PAYDAY 02/02/2023	401-07-2660		/ /		11.05
			STANDARD MATCH PAYDAY 02/02/2023	401-08-2660		/ /		26.52
			STANDARD MATCH PAYDAY 02/02/2023	401-09-2660		/ /		24.31
			STANDARD MATCH PAYDAY 02/02/2023	401-15-2660		/ /		2.21
			STANDARD MATCH PAYDAY 02/02/2023	402-50-2660		/ /		21.21
			STANDARD MATCH PAYDAY 02/02/2023	405-67-2660		/ /		.89
			STANDARD MATCH PAYDAY 02/02/2023	422-66-2660		/ /		2.68
			STANDARD MATCH PAYDAY 02/02/2023	500-48-2660		/ /		2.21
			STANDARD MATCH PAYDAY 02/02/2023	500-49-2660		/ /		2.21
			STANDARD MATCH PAYDAY 02/02/2023	508-39-2660		/ /		.55
			STANDARD MATCH PAYDAY 02/02/2023	509-38-2660		/ /		2.21
			STANDARD MATCH PAYDAY 02/02/2023	510-37-2660		/ /		2.21
			STANDARD MATCH PAYDAY 02/02/2023	629-03-2660		/ /		4.42
			STANDARD MATCH PAYDAY 02/02/2023	634-32-2660		/ /		26.52
			SUPP LIF MATCH PAYDAY 02/02/2023	401-09-2660		/ /		1.05
			SUPPLIFE DED PAYDAY 02/02/2023	401-06-2002		/ /		1.04

PROPERTY ASSESSMENTS	65.34	LAW ENFORCEMENT	58.13	DETENTION	52.40
COMMISSIONERS	4.42	ADMINISTRATION	29.83	FACILITIES MANAGEMENT	13.26
OFFICE OF COUNTY CLERK	22.10	TREASURERS	22.10	PROBATE JUDGE	4.42
ROAD	42.43	LANDFILL	1.77	REAPPRAISAL FUND	5.30
RISE GRANT	4.42	COSSAP FEDERAL GRANT	4.42	DWI PROGRAM FEES FUND	1.11
DWI DISTRIBUTION FUND	4.42	DWI GRANT FUND	4.42	EMERGENCY MGMT SERVICE	8.84
DISPATCH	53.04	WHITE SANDS MISSLE RAN	0.16		

==========

03 R128016	NM STATE TREASURER - PERA	PERA LE DED	PAYDAY	02/02/2023	401-08-2001		/ /	390.89
30158.30		PERA LE DED	PAYDAY	02/02/2023	401-08-2002		/ /	2430.41
02/03/2023		PERA LE DED	PAYDAY	02/02/2023	404-65-2002		/ /	120.78
		PERA LE MATCH	PAYDAY	02/02/2023	401-08-2040		/ /	4028.72
		PERA RG DED	PAYDAY	02/02/2023	401-01-2002		/ /	1587.13
		PERA RG DED	PAYDAY	02/02/2023	401-02-2002		/ /	477.67
		PERA RG DED	PAYDAY	02/02/2023	401-04-2001		/ /	278.13
		PERA RG DED	PAYDAY	02/02/2023	401-04-2002		/ /	646.79

CK#	DATE	Name	Description	Line Item	Invoice #	DATE	PO #	Amount
			PERA RG DED PAYDAY 02/02/2023	401-06-2001		/ /		289.81
			PERA RG DED PAYDAY 02/02/2023	401-06-2002		/ /		884.16
			PERA RG DED PAYDAY 02/02/2023	401-07-2002		/ /		505.95
			PERA RG DED PAYDAY 02/02/2023	401-08-2002		/ /		504.34
			PERA RG DED PAYDAY 02/02/2023	401-09-2002		/ /		1623.12
			PERA RG DED PAYDAY 02/02/2023	401-09-2004		/ /		142.18
			PERA RG DED PAYDAY 02/02/2023	402-50-2002		/ /		1628.26
			PERA RG DED PAYDAY 02/02/2023	405-67-2002		/ /		75.05
			PERA RG DED PAYDAY 02/02/2023	422-66-2002		/ /		175.42
			PERA RG DED PAYDAY 02/02/2023	500-48-2002		/ /		143.47
			PERA RG DED PAYDAY 02/02/2023	500-49-2002		/ /		147.34
			PERA RG DED PAYDAY 02/02/2023	508-39-2002		/ /		32.74
			PERA RG DED PAYDAY 02/02/2023	509-38-2002		/ /		140.94
			PERA RG DED PAYDAY 02/02/2023	510-37-2002		/ /		219.25
			PERA RG DED PAYDAY 02/02/2023	629-03-2002		/ /		539.21
			PERA RG DED PAYDAY 02/02/2023	634-32-2002		/ /		2012.20
			PERA RG MATCH PAYDAY 02/02/2023	401-01-2006		/ /		1466.15
			PERA RG MATCH PAYDAY 02/02/2023	401-02-2006		/ /		441.25
			PERA RG MATCH PAYDAY 02/02/2023	401-04-2006		/ /		854.41
			PERA RG MATCH PAYDAY 02/02/2023	401-06-2006		/ /		1084.40
			PERA RG MATCH PAYDAY 02/02/2023	401-07-2006		/ /		467.37
			PERA RG MATCH PAYDAY 02/02/2023	401-08-2006		/ /		465.89
			PERA RG MATCH PAYDAY 02/02/2023	401-09-2006		/ /		1630.75
			PERA RG MATCH PAYDAY 02/02/2023	402-50-2006		/ /		1504.13
			PERA RG MATCH PAYDAY 02/02/2023	405-67-2006		/ /		69.33
			PERA RG MATCH PAYDAY 02/02/2023	422-66-2006		/ /		162.16
			PERA RG MATCH PAYDAY 02/02/2023	500-48-2006		/ /		132.53
			PERA RG MATCH PAYDAY 02/02/2023	500-49-2006		/ /		136.11
			PERA RG MATCH PAYDAY 02/02/2023	508-39-2006		/ /		30.24
			PERA RG MATCH PAYDAY 02/02/2023	509-38-2006		/ /		130.19
			PERA RG MATCH PAYDAY 02/02/2023	510-37-2006		/ /		202.54
			PERA RG MATCH PAYDAY 02/02/2023	629-03-2006		/ /		498.11
			PERA RG MATCH PAYDAY 02/02/2023	634-32-2006		/ /		1858.78

LAW ENFORCEMENT	7820.25	WHITE SANDS MISSLE RAN	120.78	ADMINISTRATION	3053.28
FACILITIES MANAGEMENT	918.92	OFFICE OF COUNTY CLERK	1779.33	PROPERTY ASSESSMENTS	2258.37
TREASURERS	973.32	DETENTION	3396.05	ROAD	3132.39
LANDFILL	144.38	REAPPRAISAL FUND	337.58	RISE GRANT	276.00
COSSAP FEDERAL GRANT	283.45	DWI PROGRAM FEES FUND	62.98	DWI DISTRIBUTION FUND	271.13
DWI GRANT FUND	421.79	EMERGENCY MGMT SERVICE	1037.32	DISPATCH	3870.98

==========

03 R128017	DEPARTMENT OF THE TREASURY/FICAFICA	DED	PAYDAY 02/02/2023	401-00-2001		/ /		153.81
17419.02		FICA	DED	PAYDAY 02/02/2023	401-01-2002		/ /		841.96
02/03/2023		FICA	DED	PAYDAY 02/02/2023	401-02-2002		/ /		260.55
		FICA	DED	PAYDAY 02/02/2023	401-04-2001		/ /		154.65
		FICA	DED	PAYDAY 02/02/2023	401-04-2002		/ /		345.63
		FICA	DED	PAYDAY 02/02/2023	401-06-2001		/ /		153.22
		FICA	DED	PAYDAY 02/02/2023	401-06-2002		/ /		505.64
		FICA	DED	PAYDAY 02/02/2023	401-07-2001		/ /		148.06
		FICA	DED	PAYDAY 02/02/2023	401-07-2002		/ /		296.45
		FICA	DED	PAYDAY 02/02/2023	401-08-2001		/ /		158.89
		FICA	DED	PAYDAY 02/02/2023	401-08-2002		/ /		1486.51
		FICA	DED	PAYDAY 02/02/2023	401-09-2002		/ /		932.96
		FICA	DED	PAYDAY 02/02/2023	401-09-2004		/ /		75.08
		FICA	DED	PAYDAY 02/02/2023	401-15-2001		/ /		43.17
		FICA	DED	PAYDAY 02/02/2023	402-50-2002		/ /		863.95
		FICA	DED	PAYDAY 02/02/2023	404-65-2002		/ /		68.37
		FICA	DED	PAYDAY 02/02/2023	405-67-2002		/ /		39.65
		FICA	DED	PAYDAY 02/02/2023	405-67-2004		/ /		57.98

CK#	DATE	Name	Description	Line Item	Invoice #	DATE	PO #	Amount
			FICA DED PAYDAY	02/02/2023 422-66-2002		/ /		104.66
			FICA DED PAYDAY	02/02/2023 500-48-2002		/ /		79.78
			FICA DED PAYDAY	02/02/2023 500-49-2002		/ /		81.93
			FICA DED PAYDAY	02/02/2023 508-39-2002		/ /		18.20
			FICA DED PAYDAY	02/02/2023 509-38-2002		/ /		78.37
			FICA DED PAYDAY	02/02/2023 510-37-2002		/ /		116.36
			FICA DED PAYDAY	02/02/2023 629-03-2002		/ /		295.27
			FICA DED PAYDAY	02/02/2023 634-32-2002		/ /		1348.36
			FICA MATCH PAYDAY	02/02/2023 401-00-2007		/ /		153.82
			FICA MATCH PAYDAY	02/02/2023 401-01-2007		/ /		841.97
			FICA MATCH PAYDAY	02/02/2023 401-02-2007		/ /		260.56
			FICA MATCH PAYDAY	02/02/2023 401-04-2007		/ /		500.27
			FICA MATCH PAYDAY	02/02/2023 401-06-2007		/ /		658.85
			FICA MATCH PAYDAY	02/02/2023 401-07-2007		/ /		444.53
			FICA MATCH PAYDAY	02/02/2023 401-08-2007		/ /		1645.41
			FICA MATCH PAYDAY	02/02/2023 401-09-2007		/ /		1008.05
			FICA MATCH PAYDAY	02/02/2023 401-15-2007		/ /		43.17
			FICA MATCH PAYDAY	02/02/2023 402-50-2007		/ /		863.98
			FICA MATCH PAYDAY	02/02/2023 404-65-2007		/ /		68.37
			FICA MATCH PAYDAY	02/02/2023 405-67-2007		/ /		97.65
			FICA MATCH PAYDAY	02/02/2023 422-66-2007		/ /		104.66
			FICA MATCH PAYDAY	02/02/2023 500-48-2007		/ /		79.78
			FICA MATCH PAYDAY	02/02/2023 500-49-2007		/ /		81.92
			FICA MATCH PAYDAY	02/02/2023 508-39-2007		/ /		18.21
			FICA MATCH PAYDAY	02/02/2023 509-38-2007		/ /		78.37
			FICA MATCH PAYDAY	02/02/2023 510-37-2007		/ /		116.36
			FICA MATCH PAYDAY	02/02/2023 629-03-2007		/ /		295.27
			FICA MATCH PAYDAY	02/02/2023 634-32-2007		/ /		1348.36

COMMISSIONERS	307.63	ADMINISTRATION	1683.93	FACILITIES MANAGEMENT	521.11
OFFICE OF COUNTY CLERK	1000.55	PROPERTY ASSESSMENTS	1317.71	TREASURERS	889.04
LAW ENFORCEMENT	3290.81	DETENTION	2016.09	PROBATE JUDGE	86.34
ROAD	1727.93	WHITE SANDS MISSLE RAN	136.74	LANDFILL	195.28
REAPPRAISAL FUND	209.32	RISE GRANT	159.56	COSSAP FEDERAL GRANT	163.85
DWI PROGRAM FEES FUND	36.41	DWI DISTRIBUTION FUND	156.74	DWI GRANT FUND	232.72
EMERGENCY MGMT SERVICE	590.54	DISPATCH	2696.72		

==========

03 R128018	GLOBAL LIFE & ACCIDENT INSURANCE	GLBELIFE DED	PAYDAY	02/02/2023 401-01-2002		/ /		22.00
206.00		GLBELIFE DED	PAYDAY	02/02/2023 401-04-2002		/ /		8.00
02/03/2023		GLBELIFE DED	PAYDAY	02/02/2023 401-06-2002		/ /		19.20
		GLBELIFE DED	PAYDAY	02/02/2023 401-08-2002		/ /		24.00
		GLBELIFE DED	PAYDAY	02/02/2023 401-09-2002		/ /		12.00
		GLBELIFE DED	PAYDAY	02/02/2023 402-50-2002		/ /		43.75
		GLBELIFE DED	PAYDAY	02/02/2023 405-67-2002		/ /		10.25
		GLBELIFE DED	PAYDAY	02/02/2023 422-66-2002		/ /		12.80
		GLBELIFE DED	PAYDAY	02/02/2023 629-03-2002		/ /		22.00
		GLBELIFE DED	PAYDAY	02/02/2023 634-32-2002		/ /		32.00

ADMINISTRATION	22.00	OFFICE OF COUNTY CLERK	8.00	PROPERTY ASSESSMENTS	19.20
LAW ENFORCEMENT	24.00	DETENTION	12.00	ROAD	43.75
LANDFILL	10.25	REAPPRAISAL FUND	12.80	EMERGENCY MGMT SERVICE	22.00
DISPATCH	32.00				

==========

03 R128019	BANK OF SOUTHWEST	BSW DD DED	PAYDAY	02/02/2023 401-01-2002		/ /		200.00
200.00								
02/03/2023								

ADMINISTRATION	200.00

==========

CK#	DATE	Name	Description	Line Item	Invoice #	DATE	PO #	Amount
03 R128020		STATE EMPLOYEE CREDIT UN	NMSECU DED	PAYDAY 02/02/2023 401-06-2002		/ /		118.42
200.00			NMSECU DED	PAYDAY 02/02/2023 422-66-2002		/ /		81.58
	02/03/2023							
PROPERTY ASSESSMENTS	118.42	REAPPRAISAL FUND	81.58					
03 R128021		NAVY FEDERAL CREDIT UNION	NFCU2DD DED	PAYDAY 02/02/2023 401-01-2002		/ /		300.00
300.00								
	02/03/2023							
ADMINISTRATION	300.00							
03 R128022		NEW YORK LIFE	NYLIFEIN DED	PAYDAY 02/02/2023 401-01-2002		/ /		62.00
570.05			NYLIFEIN DED	PAYDAY 02/02/2023 401-06-2002		/ /		24.88
	02/03/2023		NYLIFEIN DED	PAYDAY 02/02/2023 401-07-2002		/ /		12.00
			NYLIFEIN DED	PAYDAY 02/02/2023 401-08-2002		/ /		78.45
			NYLIFEIN DED	PAYDAY 02/02/2023 401-09-2002		/ /		47.00
			NYLIFEIN DED	PAYDAY 02/02/2023 402-50-2002		/ /		163.68
			NYLIFEIN DED	PAYDAY 02/02/2023 509-38-2002		/ /		27.00
			NYLIFEIN DED	PAYDAY 02/02/2023 510-37-2002		/ /		27.00
			NYLIFEIN DED	PAYDAY 02/02/2023 629-03-2002		/ /		20.00
			NYLIFEIN DED	PAYDAY 02/02/2023 634-32-2002		/ /		108.04

ADMINISTRATION	62.00	PROPERTY ASSESSMENTS	24.88	TREASURERS	12.00
LAW ENFORCEMENT	78.45	DETENTION	47.00	ROAD	163.68
DWI DISTRIBUTION FUND	27.00	DWI GRANT FUND	27.00	EMERGENCY MGMT SERVICE	20.00
DISPATCH	108.04				

03 R128023		DEPARTMENT OF TRSASURY/FED	FEDTAX DED	PAYDAY 02/02/2023 401-00-2001		/ /		152.60
11931.30			FEDTAX DED	PAYDAY 02/02/2023 401-01-2002		/ /		1402.40
	02/03/2023		FEDTAX DED	PAYDAY 02/02/2023 401-02-2002		/ /		298.75
			FEDTAX DED	PAYDAY 02/02/2023 401-04-2001		/ /		279.78
			FEDTAX DED	PAYDAY 02/02/2023 401-04-2002		/ /		460.67
			FEDTAX DED	PAYDAY 02/02/2023 401-06-2001		/ /		191.48
			FEDTAX DED	PAYDAY 02/02/2023 401-06-2002		/ /		491.99
			FEDTAX DED	PAYDAY 02/02/2023 401-07-2001		/ /		248.34
			FEDTAX DED	PAYDAY 02/02/2023 401-07-2002		/ /		449.36
			FEDTAX DED	PAYDAY 02/02/2023 401-08-2001		/ /		266.12
			FEDTAX DED	PAYDAY 02/02/2023 401-08-2002		/ /		2056.22
			FEDTAX DED	PAYDAY 02/02/2023 401-09-2002		/ /		1147.63
			FEDTAX DED	PAYDAY 02/02/2023 401-09-2004		/ /		67.63
			FEDTAX DED	PAYDAY 02/02/2023 401-15-2001		/ /		82.90
			FEDTAX DED	PAYDAY 02/02/2023 402-50-2002		/ /		1269.48
			FEDTAX DED	PAYDAY 02/02/2023 404-65-2002		/ /		104.98
			FEDTAX DED	PAYDAY 02/02/2023 405-67-2002		/ /		67.34
			FEDTAX DED	PAYDAY 02/02/2023 405-67-2004		/ /		20.07
			FEDTAX DED	PAYDAY 02/02/2023 422-66-2002		/ /		110.85
			FEDTAX DED	PAYDAY 02/02/2023 500-48-2002		/ /		151.87
			FEDTAX DED	PAYDAY 02/02/2023 500-49-2002		/ /		58.68
			FEDTAX DED	PAYDAY 02/02/2023 508-39-2002		/ /		22.10
			FEDTAX DED	PAYDAY 02/02/2023 509-38-2002		/ /		47.55
			FEDTAX DED	PAYDAY 02/02/2023 510-37-2002		/ /		170.88
			FEDTAX DED	PAYDAY 02/02/2023 629-03-2002		/ /		444.66
			FEDTAX DED	PAYDAY 02/02/2023 634-32-2002		/ /		1866.97

COMMISSIONERS	152.60	ADMINISTRATION	1402.40	FACILITIES MANAGEMENT	298.75
OFFICE OF COUNTY CLERK	740.45	PROPERTY ASSESSMENTS	683.47	TREASURERS	697.70
LAW ENFORCEMENT	2322.34	DETENTION	1215.26	PROBATE JUDGE	82.90
ROAD	1269.48	WHITE SANDS MISSLS RAN	104.98	LANDFILL	87.41

CK#	DATE	Name	Description	Line Item	Invoice #	DATE	PO #	Amount

REAPPRAISAL FUND	110.85	RISE GRANT	151.87	COSSAP FEDERAL GRANT	58.68
DWI PROGRAM FEES FUND	22.10	DWI DISTRIBUTION FUND	47.55	DWI GRANT FUND	170.88
EMERGENCY MGMT SERVICE	444.66	DISPATCH	1866.97		

03 R128024	DEPARTMENT OF TREASURY/MEDICARE	MEDICR	DED	PAYDAY	02/02/2023	401-00-2001	/ /	35.97
4073.81		MEDICR	DED	PAYDAY	02/02/2023	401-01-2002	/ /	196.90
02/03/2023		MEDICR	DED	PAYDAY	02/02/2023	401-02-2002	/ /	60.94
		MEDICR	DED	PAYDAY	02/02/2023	401-04-2001	/ /	36.17
		MEDICR	DED	PAYDAY	02/02/2023	401-04-2002	/ /	80.83
		MEDICR	DED	PAYDAY	02/02/2023	401-06-2001	/ /	35.83
		MEDICR	DED	PAYDAY	02/02/2023	401-06-2002	/ /	118.26
		MEDICR	DED	PAYDAY	02/02/2023	401-07-2001	/ /	34.63
		MEDICR	DED	PAYDAY	02/02/2023	401-07-2002	/ /	69.32
		MEDICR	DED	PAYDAY	02/02/2023	401-08-2001	/ /	37.16
		MEDICR	DED	PAYDAY	02/02/2023	401-08-2002	/ /	347.65
		MEDICR	DED	PAYDAY	02/02/2023	401-09-2002	/ /	218.18
		MEDICR	DED	PAYDAY	02/02/2023	401-09-2004	/ /	17.56
		MEDICR	DED	PAYDAY	02/02/2023	401-15-2001	/ /	10.10
		MEDICR	DED	PAYDAY	02/02/2023	402-50-2002	/ /	202.04
		MEDICR	DED	PAYDAY	02/02/2023	404-65-2002	/ /	16.00
		MEDICR	DED	PAYDAY	02/02/2023	405-67-2002	/ /	9.28
		MEDICR	DED	PAYDAY	02/02/2023	405-67-2004	/ /	13.56
		MEDICR	DED	PAYDAY	02/02/2023	422-66-2002	/ /	24.47
		MEDICR	DED	PAYDAY	02/02/2023	500-48-2002	/ /	18.66
		MEDICR	DED	PAYDAY	02/02/2023	500-49-2002	/ /	19.16
		MEDICR	DED	PAYDAY	02/02/2023	508-39-2002	/ /	4.26
		MEDICR	DED	PAYDAY	02/02/2023	509-38-2002	/ /	18.33
		MEDICR	DED	PAYDAY	02/02/2023	510-37-2002	/ /	27.21
		MEDICR	DED	PAYDAY	02/02/2023	629-03-2002	/ /	69.06
		MEDICR	DED	PAYDAY	02/02/2023	634-32-2002	/ /	315.35
		MEDICR	MATCH	PAYDAY	02/02/2023	401-00-2007	/ /	35.98
		MEDICR	MATCH	PAYDAY	02/02/2023	401-01-2007	/ /	196.92
		MEDICR	MATCH	PAYDAY	02/02/2023	401-02-2007	/ /	60.93
		MEDICR	MATCH	PAYDAY	02/02/2023	401-04-2007	/ /	117.00
		MEDICR	MATCH	PAYDAY	02/02/2023	401-06-2007	/ /	154.07
		MEDICR	MATCH	PAYDAY	02/02/2023	401-07-2007	/ /	103.97
		MEDICR	MATCH	PAYDAY	02/02/2023	401-08-2007	/ /	384.79
		MEDICR	MATCH	PAYDAY	02/02/2023	401-09-2007	/ /	235.76
		MEDICR	MATCH	PAYDAY	02/02/2023	401-15-2007	/ /	10.09
		MEDICR	MATCH	PAYDAY	02/02/2023	402-50-2007	/ /	202.06
		MEDICR	MATCH	PAYDAY	02/02/2023	404-65-2007	/ /	15.99
		MEDICR	MATCH	PAYDAY	02/02/2023	405-67-2007	/ /	22.85
		MEDICR	MATCH	PAYDAY	02/02/2023	422-66-2007	/ /	24.50
		MEDICR	MATCH	PAYDAY	02/02/2023	500-48-2007	/ /	18.66
		MEDICR	MATCH	PAYDAY	02/02/2023	500-49-2007	/ /	19.16
		MEDICR	MATCH	PAYDAY	02/02/2023	508-39-2007	/ /	4.26
		MEDICR	MATCH	PAYDAY	02/02/2023	509-38-2007	/ /	18.33
		MEDICR	MATCH	PAYDAY	02/02/2023	510-37-2007	/ /	27.22
		MEDICR	MATCH	PAYDAY	02/02/2023	629-03-2007	/ /	69.05
		MEDICR	MATCH	PAYDAY	02/02/2023	634-32-2007	/ /	315.34

COMMISSIONERS	71.95	ADMINISTRATION	393.82	FACILITIES MANAGEMENT	121.87
OFFICE OF COUNTY CLERK	234.00	PROPERTY ASSESSMENTS	308.16	TREASURERS	207.92
LAW ENFORCEMENT	769.60	DETENTION	471.50	PROBATE JUDGE	20.19
ROAD	404.10	WHITE SANDS MISSLE RAN	31.99	LANDFILL	45.69
REAPPRAISAL FUND	48.97	RISE GRANT	37.32	COSSAP FEDERAL GRANT	38.32
DWI PROGRAM FEES FUND	8.52	DWI DISTRIBUTION FUND	36.66	DWI GRANT FUND	54 43
EMERGENCY MGMT SERVICE	138.11	DISPATCH	630.69		

CK#	DATE	Name	Description			Line Item	Invoice #	DATE	PO #	Amount
03 R128025		NM RETIREE HEALTH CARE AUTHORITY	RHCA	DED	PAYDAY	02/02/2023 401-01-2002		/ /		142.35
4011.85			RHCA	DED	PAYDAY	02/02/2023 401-02-2002		/ /		42.84
02/03/2023			RHCA	DED	PAYDAY	02/02/2023 401-04-2001		/ /		24.94
			RHCA	DED	PAYDAY	02/02/2023 401-04-2002		/ /		58.00
			RHCA	DED	PAYDAY	02/02/2023 401-06-2001		/ /		25.99
			RHCA	DED	PAYDAY	02/02/2023 401-06-2002		/ /		79.28
			RHCA	DED	PAYDAY	02/02/2023 401-07-2002		/ /		45.37
			RHCA	DED	PAYDAY	02/02/2023 401-08-2002		/ /		45.23
			RHCA	DED	PAYDAY	02/02/2023 401-09-2002		/ /		145.58
			RHCA	DED	PAYDAY	02/02/2023 401-09-2004		/ /		12.75
			RHCA	DED	PAYDAY	02/02/2023 402-50-2002		/ /		146.04
			RHCA	DED	PAYDAY	02/02/2023 405-67-2002		/ /		6.73
			RHCA	DED	PAYDAY	02/02/2023 422-66-2002		/ /		15.73
			RHCA	DED	PAYDAY	02/02/2023 500-48-2002		/ /		12.87
			RHCA	DED	PAYDAY	02/02/2023 500-49-2002		/ /		13.21
			RHCA	DED	PAYDAY	02/02/2023 508-39-2002		/ /		2.93
			RHCA	DED	PAYDAY	02/02/2023 509-38-2002		/ /		12.64
			RHCA	DED	PAYDAY	02/02/2023 510-37-2002		/ /		19.66
			RHCA	DED	PAYDAY	02/02/2023 629-03-2002		/ /		48.36
			RHCA	DED	PAYDAY	02/02/2023 634-32-2002		/ /		180.47
			RHCA	MATCH	PAYDAY	02/02/2023 401-01-2662		/ /		284.70
			RHCA	MATCH	PAYDAY	02/02/2023 401-02-2662		/ /		85.68
			RHCA	MATCH	PAYDAY	02/02/2023 401-04-2662		/ /		165.91
			RHCA	MATCH	PAYDAY	02/02/2023 401-06-2662		/ /		210.55
			RHCA	MATCH	PAYDAY	02/02/2023 401-07-2662		/ /		90.76
			RHCA	MATCH	PAYDAY	02/02/2023 401-08-2662		/ /		90.47
			RHCA	MATCH	PAYDAY	02/02/2023 401-09-2662		/ /		316.66
			RHCA	MATCH	PAYDAY	02/02/2023 402-50-2662		/ /		292.04
			RHCA	MATCH	PAYDAY	02/02/2023 405-67-2662		/ /		13.47
			RHCA	MATCH	PAYDAY	02/02/2023 422-66-2662		/ /		31.49
			RHCA	MATCH	PAYDAY	02/02/2023 500-48-2662		/ /		25.73
			RHCA	MATCH	PAYDAY	02/02/2023 500-49-2662		/ /		26.43
			RHCA	MATCH	PAYDAY	02/02/2023 508-39-2662		/ /		5.87
			RHCA	MATCH	PAYDAY	02/02/2023 509-38-2662		/ /		25.28
			RHCA	MATCH	PAYDAY	02/02/2023 510-37-2662		/ /		39.33
			RHCA	MATCH	PAYDAY	02/02/2023 629-03-2662		/ /		96.72
			RHCA	MATCH	PAYDAY	02/02/2023 634-32-2662		/ /		360.93
			RHCA SO	DED	PAYDAY	02/02/2023 401-08-2001		/ /		34.05
			RHCA SO	DED	PAYDAY	02/02/2023 401-08-2002		/ /		211.72
			RHCA SO	DED	PAYDAY	02/02/2023 404-65-2002		/ /		10.53
			RHCA SO	MATCH	PAYDAY	02/02/2023 401-08-2662		/ /		512.56

ADMINISTRATION	427.05	FACILITIES MANAGEMENT	128.52	OFFICE OF COUNTY CLERK	248.85
PROPERTY ASSESSMENTS	315.82	TREASURERS	136.13	LAW ENFORCEMENT	894.03
DETENTION	474.99	ROAD	438.08	LANDFILL	20.20
REAPPRAISAL FUND	47.22	RISE GRANT	38.60	COSSAP FEDERAL GRANT	39.64
DWI PROGRAM FEES FUND	8.80	DWI DISTRIBUTION FUND	37.92	DWI GRANT FUND	58.99
EMERGENCY MGMT SERVICE	145.08	DISPATCH	541.40	WHITE SANDS MISSLE RAN	10.53

03 R128026		NATIONWIDE	D-COMP	DED	PAYDAY	02/02/2023 401-01-2002		/ /		65.00
1065.00			D-COMP	DED	PAYDAY	02/02/2023 401-02-2002		/ /		55.00
02/03/2023			D-COMP	DED	PAYDAY	02/02/2023 401-04-2001		/ /		35.00
			D-COMP	DED	PAYDAY	02/02/2023 401-08-2002		/ /		150.00
			D-COMP	DED	PAYDAY	02/02/2023 401-09-2002		/ /		30.00
			D-COMP	DED	PAYDAY	02/02/2023 401-09-2004		/ /		50.00
			D-COMP	DED	PAYDAY	02/02/2023 402-50-2002		/ /		230.00
			D-COMP	DED	PAYDAY	02/02/2023 405-67-2002		/ /		10.00
			D-COMP	DED	PAYDAY	02/02/2023 510-37-2002		/ /		15.00
			D-COMP	DED	PAYDAY	02/02/2023 629-03-2002		/ /		100.00

CK#	DATE	Name	Description	Line Item	Invoice #	DATE	PO #	Amount		
			D-COMP DED PAYDAY 02/02/2023	634-32-2002		/ /		325.00		

ADMINISTRATION	65.00	FACILITIES MANAGEMENT	55.00	OFFICE OF COUNTY CLERK	35.00
LAW ENFORCEMENT	150.00	DETENTION	80.00	ROAD	230.00
LANDFILL	10.00	DWI GRANT FUND	15.00	EMERGENCY MGMT SERVICE	100.00
DISPATCH	325.00				

03 R128027	BLUETARP FINANCIAL, INC.	CAPT ONE DED PAYDAY 02/02/2023	401-01-2002		/ /			350.00	
350.00									
02/03/2023									
ADMINISTRATION	350.00								
03 R128028	GO2BANK	GOTOBANK DED PAYDAY 02/02/2023	401-04-2001		/ /			200.00	
200.00									
02/03/2023									
OFFICE OF COUNTY CLERK	200.00								
03 R128029	AMAZON CAPITAL SERVICES, INC	AMAZON FACIAL TISSUES	401-07-2225	2022023	02/02/2023	69817	23.66	23.66	1.00
1112.00		CLOROX WIPES 3-PACK	401-07-2225		/ /	69817	12.49	12.49	1.00
02/03/2023		EPSON PRINTER RIBBON ERC-32B	401-07-2225		/ /	69817	50.16	8.36	6.00
		3"X150' PRINTER RECEIPT PAPER	401-07-2225		/ /	69817	52.99	52.99	1.00
		8.5X11 COPY PAPER	401-07-2225		/ /	69817	78.20	39.10	2.00
		PENDAFLEX LETTER SIZE FOLDERS	401-07-2225		/ /	69817	38.32	19.16	2.00
		HANGING FILE FOLDERS	401-07-2225		/ /	69817	115.96	28.99	4.00
		SCOTCH PACKING TAPE	401-07-2225		/ /	69817	7.91	7.91	1.00
		#10 SELF SEAL ENVELOPES	401-07-2225		/ /	69817	83.97	27.99	3.00
		MEAD 6X9 ENVELOPES	401-07-2225		/ /	69817	13.14	6.57	2.00
		BIC WITE-OUT CORRECTION TAPE	401-07-2225		/ /	69817	15.38	15.38	1.00
		BIC YELLOW HIGHLIGHTERS-24 CT	401-07-2225		/ /	69817	10.99	10.99	1.00
		AVERY 4X6 PRINTABLE CARDS	401-07-2225		/ /	69817	412.00	16.48	25.00
		AVERY ADDRESS LABELS	401-07-2225		/ /	69817	24.20	24.20	1.00
		STANDARD STAPLES 10 PACK	401-07-2225		/ /	69817	14.89	14.89	1.00
		3X3 POST IT NOTES	401-07-2225		/ /	69817	17.98	8.99	2.00
		HP 952 3-PACK COLOR CARTRIDGE	401-07-2225		/ /	69817	75.89	75.89	1.00
		HP 952XL BLACK INK CARTRIDGE	401-07-2225		/ /	69817	51.89	51.89	1.00
		SHIPPING & HANDLING	401-07-2225		/ /	69817	11.98	11.98	1.00
		SIERRA COUNTY TREASURER							
		INVOICE NO. 1C7W-MNJD-9PKG							
		INVOICE DATE 01/30/2023							
TREASURERS	1112.00								
03 R128030	AMERICAN LINEN SUPPLY INC.	MATS,TOWELS,COVERALLS	402-50-2225	2012023	02/01/2023	69293	32.56	32.56	1.00
32.56		SIERRA COUNTY ROAD DEPT							
02/03/2023		INVOICE NO. 0775479							
		INVOICE DATE 01/27/2023							
		ACCOUNT NO. 141436-00000							
ROAD	32.56								
03 R128031	AT&T	SIERRA COUNTY SHERIFF'S DEPT	401-08-2221	2012023	02/01/2023			94.52	94.52	1.00
94.52		575-894-9150							
02/03/2023		ACCOUNT NO. 019 191 5371 001							
		BILL DATE 01/22/2023							
LAW ENFORCEMENT	94.52								

CK#	DATE	Name	Description	Line Item	Invoice #	DATE	PO #	Amount		
03 R128032		AT&T MOBILITY LLC	SIERRA COUNTY SHERIFF'S DEPT	401-08-2221	2012023	02/01/2023		615.09	615.09	1.00
615.09			ACCOUNT NO. 287297348629							
	02/03/2023		INVOICE NO.287297348629X01262023							
			BILL DATE 01/18/2023							
LAW ENFORCEMENT		615.09								
03 O128033		BULLOCKS ACCOUNT NO.418 DET	MEALS FOR DETAINEES	605-86-2888	2012023	02/01/2023	69336	49.07	49.07	1.00
49.07			SIERRA COUNTY DETENTION							
	02/03/2023		TICKET NO. 3704							
			TICKET DATE 01/12/2023							
CORRECTION FEES		49.07								
03 R128034		CATERPILLAR FINANCIAL SERVICES	2022 CATERPILLAR TRACTOR D6-20	402-50-2899	2012023	02/01/2023	69454	5351.01	5351.01	1.00
5351.01			SIERRA COUNTY ROAD DEPT							
	02/03/2023		INVOICE NO. 33434633							
			INVOICE DATE 01/23/2023							
			CUSTOMER NO. 2015601							
ROAD		5351.01								
03 R128035		FASTWAVE.BIZ	SIERRA COUNTY FACILITIES MGMT	401-02-2333	2022023	02/02/2023		54.19	54.19	1.00
275.07			INVOICE NO. 65499							
	02/03/2023		INVOICE DATE 02/01/2023							
			CABALLO FIRE DEPT	413-80-2221		/ /		70.44	70.44	1.00
			INVOICE NO. 65443							
			INVOICE DATE 02/01/2023							
			SIERRA COUNTY ROAD DEPT	402-50-2333		/ /		70.44	70.44	1.00
			INVOICE NO. 66101							
			INVOICE DATE 02/01/2023							
			SIERRA COUNTY SHERIFF'S DEPT	401-08-2333		/ /		80.00	80.00	1.00
			INVOICE NO. 66100							
			INVOICE DATE 02/01/2023							
FACILITIES MANAGEMENT		54.19	CABALLO FIRE	70.44	ROAD		70.44			
LAW ENFORCEMENT		80.00								
03 R128036		MERCHANTS AUTOMOTIVE GROUP. INC	MERCHANTS FLEET AUTO(COSSAP)	500-49-2898	2012023	02/01/2023	69297	1486.33	1486.33	1.00
1486.33			SIERRA COUNTY DETENTION							
	02/03/2023		INVOICE NO. LW0283696							
			INVOICE DATE 01/31/2023							
			JANUARY 2023 BILLING							
			CUSTOMER NO. LS010150							
COSSAP FEDERAL GRANT		1486.33								
03 R128037		MICHAEL KOZLOSKI	MONTHLY IT SUPPORT	401-00-2333	2012023	02/01/2023	69218	4880.00	4880.00	1.00
13385.70			COUNTY GRT	401-00-2333		/ /	69218	408.70	408.70	1.00
	02/03/2023		SIERRA COUNTY ADMINISTRATION							
			FEBRUARY 2023							
			INVOICE DATE 02/01/2023							
			MALWAREBYTES ANTI-VIRUS	401-00-2333	2032023	02/03/2023	69828	8097.00	8097.00	1.00
			SIERRA COUNTY ADMINISTRATION				69828			
			INVOICE DATE 02/02/2023							
COMMISSIONERS		13385.70								
03 R128038		NEW MEXICO GAS COMPANY	SIERRA COUNTY COURT HOUSE	401-02-2552	2022023	02/02/2023		1050.54	1050.54	1.00

CK#	DATE	Name	Description	Line Item	Invoice #	DATE	PO #	Amount		
1574.62			ACCOUNT NO. 044200112-0476655-9							
	02/03/2023		311 N DATE ST							
			BILL DATE 01/26/2023							
			PUBLIC HEALTH OFFICE	401-02-2552		/ /		454.57	454.57	1.00
			ACCOUNT NO. 044507601-0479730-4							
			201 E 4TH AVE							
			BILL DATE 01/26/2023							
			SIERRA COUNTY FACILITIES MGMT	401-02-2552		/ /		69.51	69.51	1.00
			ACCOUNT NO. 044200213-0476656-4							
			BILL DATE 01/26/2023							
FACILITIES MANAGEMENT 1574.62										
03 R128039		NM EDGE	CPM 145 INVESTING &	635-33-2114	2022023	02/02/2023	69789	75.00	75.00	1.00
150.00			GROWING PUBLIC FUNDS				69789			
	02/03/2023		CPM 143 PURCHASING &	635-33-2114		/ /	69789	75.00	75.00	1.00
			PROCUREMENT				69789			
			SIERRA COUNTY TREASURER				69789			
			INVOICE NO. 10916							
			INVOICE DATE 02/01/2023							
TREASURER'S FEES 150.00										
03 R128040		NM RETIREE HEALTH CARE AUTHORIT	SIERRA COUNTY'S SURPLUS	401-00-2662	2012023	02/01/2023		9447.23	9447.23	1.00
9447.23			CONTRIBUTION FOR THE RETIREE							
	02/03/2023		HEALTH CARE FOR FEBRUARY, 2023							
			INVOICE DATE 02/01/2023							
COMMISSIONERS 9447.23										
03 0128041		O'REILLY AUTOMOTIVE STORES, INC	GAS MAGNUM	402-50-2330	1312023	01/31/2023	69731	90.48	90.48	1.00
126.27			INVOICE NO. 2162-105543							
	02/03/2023		INVOICE DATE 01/31/2023							
			VARIOUS PARTS	402-50-2330		/ /	69731	35.79	35.79	1.00
			INVOICE NO. 2162-105549							
			INVOICE DATE 01/31/2023							
			CUSTOMER NO. 80397							
			SIERRA COUNTY ROAD DEPT							
ROAD 126.27										
03 R128042		PHIL LONG FORD OF RATON, LLC	2022 EXPLORER POLICE INTERCPETOR	401-08-2900	2022023	02/02/2023	69516	60741.90	60741.90	1.00
75380.00			REMAINING BALANCE	604-85-2021		/ /	69516	14638.10	14638.10	1.00
	02/03/2023		SIERRA COUNTY SHERIFF'S DEPT				69516			
			INVOICE NO. 12528				69516			
			INVOICE DATE 01/17/2023							
LAW ENFORCEMENT 60741.90 LAW ENFORCEMENT PROTEC 14638.10										
03 R128043		QUADIENT FINANCE USA, INC.	SIERRA COUNTY TREASURER--POSTAGE	401-07-2220	2022023	02/02/2023		103.53	103.53	1.00
430.32			SIERRA COUNTY CLERK--POSTAGE	401-04-2220		/ /		111.36	111.36	1.00
	02/03/2023		SIERRA COUNTY ASSESSOR--POSTAGE	401-06-2220		/ /		16.47	16.47	1.00
			SIERRA COUNTY ELECTIONS--POSTAGE	401-05-2220		/ /		92.37	92.37	1.00
			ACCOUNT NO. 7900 0110 0238 0197							
			JANUARY 2023							
			SIERRA COUNTY ADMIN--POSTAGE	401-01-2220		/ /		89.01	89.01	1.00
			SIERRA COUNTY ROAD--POSTAGE	402-50-2220		/ /		1.44	1.44	1.00
			SIERRA COUNTY DISPATCH--POSTAGE	634-32-2220		/ /		6.33	6.33	1.00
			SIERRA COUNTY SHERIFF--POSTAGE	401-08-2220		/ /		9.81	9.81	1.00

CK#	DATE	Name	Description	Line Item	Invoice #	DATE	PO #	Amount		
			ACCOUNT NO. 7900 0440 8084 1541							
			JANUARY 2023							

TREASURERS	103.53	OFFICE OF COUNTY CLERK	111.36	PROPERTY ASSESSMENTS	16.47
BUREAU OF ELECTIONS	92.37	ADMINISTRATION	89.01	ROAD	1.44
DISPATCH	6.33	LAW ENFORCEMENT	9.61		

03 R128044	QUILL CORPORATION	9X12 ENVELOPES	402-50-2225	2012023	02/01/2023	69795	19.99	19.99	1.00
318.73		MOUSE PADS	402-50-2225		/ /	69795	7.21	7.21	1.00
02/03/2023		FILE FOLDERS	402-50-2225		/ /	69795	89.29	89.29	1.00
		CARD STOCK	402-50-2225		/ /	69795	89.64	22.41	4.00
		MONTHLY PLANNER	402-50-2225		/ /	69795	42.92	21.46	2.00
		GEL PENS BLACK	402-50-2225		/ /	69795	45.57	15.19	3.00
		GEL PENS BLUE	402-50-2225		/ /	69795	18.61	18.61	1.00
		HIGHLIGHTERS	402-50-2225		/ /	69795	5.50	2.75	2.00
		SIERRA COUNTY ROAD DEPT							
		INVOICE NO. 30223238							
		INVOICE DATE 01/17/2023							
		ACCOUNT NO. 2693114							

ROAD 318.73

03 R128045	SPECIALTY COMMUNICATIONS	EXTENSION SPEAKER	633-44-2330	2012023	02/01/2023	69720	69.72	34.86	2.00
341.70		HIGH GAIN ANTENNA	633-44-2330		/ /	69720	66.00	66.00	1.00
02/03/2023		2860 LI-ION BATTERY	633-44-2330		/ /	69720	186.00	93.00	2.00
		SHIPPING	633-44-2330		/ /	69720	19.98	19.98	1.00
		LAS PALOMAS EMS				69720			
		INVOICE NO. 141813							
		INVOICE DATE 12/30/2022							

LAS PALOMAS EMS 341.70

03 R128046	TDS BROADBAND LLC	SIERRA COUNTY ADMINISTRATION	401-01-2333	2012023	02/01/2023		53.56	53.56	1.00
321.34		SIERRA COUNTY ASSESSOR	401-06-2333		/ /		53.56	53.56	1.00
02/03/2023		SIERRA COUNTY CLERK	401-04-2333		/ /		53.56	53.56	1.00
		SIERRA COUNTY TREASURER	401-07-2333		/ /		53.56	53.56	1.00
		SIERRA COUNTY DWI	509-38-2333		/ /		53.55	53.55	1.00
		SIERRA COUNTY FIRE ADMINISTRATOR	426-45-2333		/ /		53.55	53.55	1.00
		INTERNET SERVICES							
		ACCOUNT NO. 8224 30 007 0080830							
		BILL DATE 01/24/2023							

ADMINISTRATION	53.56	PROPERTY ASSESSMENTS	53.56	OFFICE OF COUNTY CLERK	53.56
TREASURERS	53.56	DWI DISTRIBUTION FUND	53.55	FIRE ADMINISTRATOR	53.55

03 R128047	THE OLIVE TREE	SIERRA COUNTY DETENTION	500-48-2106	2012023	02/01/2023	69296	15598.57	15598.57	1.00
15598.57		RISE GRANT							
02/03/2023		JANUARY 2023 INVOICES							
		INVOICE DATE 01/31/2023							

RISE GRANT 15598.57

03 R128048	THE OLIVE TREE	SIERRA COUNTY DETENTION	500-47-2106	2012023A	02/01/2023	69295	2695.00	2695.00	1.00
2695.00		LEAD GRANT							
02/03/2023		JANUARY 2023 INVOICES							
		INVOICE DATE 01/31/2023							

LEAD GRANT 2695.00

CK#	DATE	Name	Description	Line Item	Invoice #	DATE	PO #	Amount		
03 R128049		THE OLIVE TREE	SIERRA COUNTY DETENTION	500-46-2106	20120238	02/01/2023	69343	18551.61	18551.61	1.00
18551.61			BHIZ GRANT							
02/03/2023			JANUARY 2023 INVOICES							
			INVOICE DATE 01/31/2023							
BHIZ GRANT	18551.61									
03 R128050		WEST DIRECT OIL, LLC	55 GALLON DRUM DEPOSIT	402-50-2442	2032023	02/03/2023	69750	55.00	27.50	2.00
1654.40			0W20 OIL IN DRUM	402-50-2442		/ /	69750	1599.40	799.70	2.00
02/03/2023			SIERRA COUNTY ROAD DEPT							
			INVOICE NO. 1451858							
			ORDER DATE 01/05/2023							
			CUSTOMER ID 29977							
ROAD	1654.40									
03 R128051		WINDSTREAM	SIERRA COUNTY ROAD DEPT	402-50-2221	2012023	02/01/2023		112.69	112.69	1.00
233.83			ACCOUNT NO. 100290455							
02/03/2023			575-894-6881							
			INVOICE DATE 01/18/2023							
			SIERRA COUNTY CLERK/ELECTIONS	401-05-2221		/ /		121.14	121.14	1.00
			ACCOUNT NO. 100915842							
			575-744-0043							
			INVOICE DATE 01/25/2023							
ROAD	112.69	BUREAU OF ELECTIONS	121.14							
03 R128052		XEROX CORPORATION	SIERRA COUNTY DWI	509-38-2898	1312023	01/31/2023	69318	241.31	241.31	1.00
241.31			INVOICE NO. 017925700							
02/03/2023			CUSTOMER NO. 720595941							
			DECEMBER 2022 BILLING							
			INVOICE DATE 01/02/2023							
DWI DISTRIBUTION FUND	241.31									
DD E029167		HOLGUIN, JOCELYN	PYRL FM-01/29/2023 TO-02/11/2023	401-01-2002		/ /		1134.58		
1134.58										
02/16/2023										
ADMINISTRATION	1134.58									
DD E029168		MENA, REBECCA L	PYRL FM-01/29/2023 TO-02/11/2023	401-01-2002		/ /		1166.91		
1166.91										
02/16/2023										
ADMINISTRATION	1166.91									
DD E029169		MIRANDA, DORA	PYRL FM-01/29/2023 TO-02/11/2023	401-01-2002		/ /		719.80		
799.78			PYRL FM-01/29/2023 TO-02/11/2023	401-01-2002		/ /		79.98		
02/16/2023										
ADMINISTRATION	799.78									
DD E029170		VAUGHN, AMBER	PYRL FM-01/29/2023 TO-02/11/2023	401-01-2002		/ /		2812.38		
2812.38										
02/16/2023										
ADMINISTRATION	2812.38									

CK#	DATE	Name	Description	Line Item	Invoice #	DATE	PO #	Amount
DD E029171		WHITNEY, KEITH WESLEY	PYRL FM-01/29/2023 TO-02/11/2023	401-01-2002		/ /		618.87
618.87								
02/16/2023								
ADMINISTRATION	618.87							
DD E029172		ENGLE, LARITA M	PYRL FM-01/29/2023 TO-02/11/2023	401-01-2002		/ /		410.09
630.94			PYRL FM-01/29/2023 TO-02/11/2023	401-01-2002		/ /		94.65
02/16/2023			PYRL FM-01/29/2023 TO-02/11/2023	401-01-2002		/ /		126.20
ADMINISTRATION	630.94							
DD E029173		BARDOLIWALA, JINAL V	PYRL FM-01/29/2023 TO-02/11/2023	401-06-2002		/ /		841.13
843.44			PYRL FM-01/29/2023 TO-02/11/2023	401-06-2002		/ /		2.31
02/16/2023								
PROPERTY ASSESSMENTS	843.44							
DD E029174		BARNES, CHEALSEY D	PYRL FM-01/29/2023 TO-02/11/2023	422-66-2002		/ /		16.43
902.64			PYRL FM-01/29/2023 TO-02/11/2023	401-06-2002		/ /		24.66
02/16/2023			PYRL FM-01/29/2023 TO-02/11/2023	401-06-2002		/ /		463.99
			PYRL FM-01/29/2023 TO-02/11/2023	422-66-2002		/ /		313.76
			PYRL FM-01/29/2023 TO-02/11/2023	401-06-2002		/ /		38.33
			PYRL FM-01/29/2023 TO-02/11/2023	422-66-2002		/ /		25.55
			PYRL FM-01/29/2023 TO-02/11/2023	401-06-2002		/ /		9.94
			PYRL FM-01/29/2023 TO-02/11/2023	422-66-2002		/ /		9.98
REAPPRAISAL FUND	365.72	PROPERTY ASSESSMENTS	536.92					
DD E029175		COULTER, ASHLEIGH A	PYRL FM-01/29/2023 TO-02/11/2023	401-06-2002		/ /		1599.86
1599.86								
02/16/2023								
PROPERTY ASSESSMENTS	1599.86							
DD E029176		HUSTON, MICHAEL D	PYRL FM-01/29/2023 TO-02/11/2023	401-06-2001		/ /		1668.25
1668.25								
02/16/2023								
PROPERTY ASSESSMENTS	1668.25							
DD E029177		MONTENEGRO, ERNESTINA	PYRL FM-01/29/2023 TO-02/11/2023	401-06-2002		/ /		47.32
1106.06			PYRL FM-01/29/2023 TO-02/11/2023	422-66-2002		/ /		31.55
02/16/2023			PYRL FM-01/29/2023 TO-02/11/2023	401-06-2002		/ /		541.12
			PYRL FM-01/29/2023 TO-02/11/2023	422-66-2002		/ /		356.48
			PYRL FM-01/29/2023 TO-02/11/2023	401-06-2002		/ /		.79
			PYRL FM-01/29/2023 TO-02/11/2023	422-66-2002		/ /		.60
			PYRL FM-01/29/2023 TO-02/11/2023	401-06-2002		/ /		76.50
			PYRL FM-01/29/2023 TO-02/11/2023	422-66-2002		/ /		51.70
PROPERTY ASSESSMENTS	665.73	REAPPRAISAL FUND	440.33					
DD E029178		SCOTT, JULIE ANN	PYRL FM-01/29/2023 TO-02/11/2023	401-06-2002		/ /		669.68
744.10			PYRL FM-01/29/2023 TO-02/11/2023	401-06-2002		/ /		74.42
02/16/2023								
PROPERTY ASSESSMENTS	744.10							
DD E029179		WOMACK, VIRGINIA	PYRL FM-01/29/2023 TO-02/11/2023	422-66-2002		/ /		23.51

CK#	DATE	Name	Description	Line Item	Invoice #	DATE	PO #	Amount
724.80			PYRL FM-01/29/2023 TO-02/11/2023	401-06-2002		/ /		35.27
	02/16/2023		PYRL FM-01/29/2023 TO-02/11/2023	401-06-2002		/ /		173.36
			PYRL FM-01/29/2023 TO-02/11/2023	422-66-2002		/ /		123.82
			PYRL FM-01/29/2023 TO-02/11/2023	401-06-2002		/ /		4.12
			PYRL FM-01/29/2023 TO-02/11/2023	422-66-2002		/ /		1.50
			PYRL FM-01/29/2023 TO-02/11/2023	401-06-2002		/ /		23.12
			PYRL FM-01/29/2023 TO-02/11/2023	422-66-2002		/ /		9.92
			PYRL FM-01/29/2023 TO-02/11/2023	401-06-2002		/ /		198.11
			PYRL FM-01/29/2023 TO-02/11/2023	422-66-2002		/ /		132.07
REAPPRAISAL FUND		290.82	PROPERTY ASSESSMENTS	433.98				
DD E029180		ARMIJO, CORTNEY	PYRL FM-01/29/2023 TO-02/11/2023	401-04-2002		/ /		674.26
749.18			PYRL FM-01/29/2023 TO-02/11/2023	401-04-2002		/ /		74.92
	02/16/2023							
OFFICE OF COUNTY CLERK		749.18						
DD E029181		DAVIS, EILEEN I	PYRL FM-01/29/2023 TO-02/11/2023	401-04-2002		/ /		723.50
734.99			PYRL FM-01/29/2023 TO-02/11/2023	401-04-2002		/ /		2.30
	02/16/2023		PYRL FM-01/29/2023 TO-02/11/2023	401-04-2002		/ /		9.19
OFFICE OF COUNTY CLERK		734.99						
DD E029182		SOPKOWIAK, TERESA	PYRL FM-01/29/2023 TO-02/11/2023	401-04-2002		/ /		782.50
782.50								
	02/16/2023							
OFFICE OF COUNTY CLERK		782.50						
DD E029183		TRUJILLO, SHELLY K	PYRL FM-01/29/2023 TO-02/11/2023	401-04-2001		/ /		1282.11
1282.11								
	02/16/2023							
OFFICE OF COUNTY CLERK		1282.11						
DD E029184		WHITEHEAD, AMY	PYRL FM-01/29/2023 TO-02/11/2023	401-04-2002		/ /		1287.11
1287.11								
	02/16/2023							
OFFICE OF COUNTY CLERK		1287.11						
DD E029185		DAY, TRAVIS L	PYRL FM-01/29/2023 TO-02/11/2023	401-00-2001		/ /		701.13
701.13								
	02/16/2023							
COMMISSIONERS		701.13						
DD E029186		PAXON, JAMES E JR	PYRL FM-01/29/2023 TO-02/11/2023	401-00-2001		/ /		593.26
593.26								
	02/16/2023							
COMMISSIONERS		593.26						
DD E029187		HOPKINS, WILLIAM	PYRL FM-01/29/2023 TO-02/11/2023	401-00-2001		/ /		750.49
750.49								
	02/16/2023							
COMMISSIONERS		750.49						

CK#	DATE	Name	Description	Line Item	Invoice #	DATE	PO #	Amount
DD R029188		TITTRA, BRITTNEY M	PYRL FM-01/29/2023 TO-02/11/2023 401-01-2002			/ /		596.62
795.50			PYRL FM-01/29/2023 TO-02/11/2023 508-39-2002			/ /		198.88
02/16/2023								
ADMINISTRATION 596.62 DWI PROGRAM FEES FUND 198.88								
DD R029189		LUCERO, SANDRA SEGURA	PYRL FM-01/29/2023 TO-02/11/2023 510-37-2002			/ /		1185.01
1185.01								
02/16/2023								
DWI GRANT FUND 1185.01								
DD R029190		SEGURA, VENESSA C	PYRL FM-01/29/2023 TO-02/11/2023 509-38-2002			/ /		718.53
912.41			PYRL FM-01/29/2023 TO-02/11/2023 509-38-2002			/ /		11.41
02/16/2023			PYRL FM-01/29/2023 TO-02/11/2023 509-38-2002			/ /		182.47
DWI DISTRIBUTION FUND 912.41								
DD R029191		ATWELL, TRAVIS	PYRL FM-01/29/2023 TO-02/11/2023 629-03-2002			/ /		1522.73
1522.73								
02/16/2023								
EMERGENCY MGMT SERVICE 1522.73								
DD R029192		WILLIAMS, RYAN R	PYRL FM-01/29/2023 TO-02/11/2023 629-03-2002			/ /		1497.08
1497.08								
02/16/2023								
EMERGENCY MGMT SERVICE 1497.08								
DD R029193		ARMIJO, ERNIE L	PYRL FM-01/29/2023 TO-02/11/2023 401-02-2002			/ /		1159.38
1159.38								
02/16/2023								
FACILITIES MANAGEMENT 1159.38								
DD R029194		ATWELL, SHANE T	PYRL FM-01/29/2023 TO-02/11/2023 401-02-2002			/ /		792.30
792.30								
02/16/2023								
FACILITIES MANAGEMENT 792.30								
DD R029195		HEARN, MICHAEL	PYRL FM-01/29/2023 TO-02/11/2023 401-02-2002			/ /		925.76
925.76								
02/16/2023								
FACILITIES MANAGEMENT 925.76								
DD R029196		ALVAREZ GOMEZ, HECTOR	PYRL FM-01/29/2023 TO-02/11/2023 401-09-2002			/ /		741.00
976.24			PYRL FM-01/29/2023 TO-02/11/2023 401-09-2002			/ /		141.15
02/16/2023			PYRL FM-01/29/2023 TO-02/11/2023 401-09-2002			/ /		94.09
DETENTION 976.24								
DD R029197		EASLEY, JEREMIAH	PYRL FM-01/29/2023 TO-02/11/2023 401-09-2002			/ /		840.15
990.43			PYRL FM-01/29/2023 TO-02/11/2023 401-09-2005			/ /		150.28
02/16/2023								
DETENTION 990.43								

CK#	DATE	Name	Description	Line Item	Invoice #	DATE	PO #	Amount
DD E029198		GARCIA, EDEN	PYRL FM-01/29/2023 TO-02/11/2023	401-09-2002		/ /		912.22
1288.96			PYRL FM-01/29/2023 TO-02/11/2023	401-09-2002		/ /		93.53
02/16/2023			PYRL FM-01/29/2023 TO-02/11/2023	401-09-2005		/ /		189.61
			PYRL FM-01/29/2023 TO-02/11/2023	401-09-2002		/ /		93.60
DETENTION		1288.96						
DD E029199		GUTIERREZ, LOURDES B	PYRL FM-01/29/2023 TO-02/11/2023	401-09-2002		/ /		527.44
753.49			PYRL FM-01/29/2023 TO-02/11/2023	401-09-2002		/ /		226.05
02/16/2023								
DETENTION		753.49						
DD E029200		LEE, VIRGINIA A	PYRL FM-01/29/2023 TO-02/11/2023	401-09-2004		/ /		800.06
800.06								
02/16/2023								
DETENTION		800.06						
DD E029201		LUCERO, RUBEN B	PYRL FM-01/29/2023 TO-02/11/2023	401-09-2002		/ /		1373.11
1650.36			PYRL FM-01/29/2023 TO-02/11/2023	401-09-2002		/ /		136.41
02/16/2023			PYRL FM-01/29/2023 TO-02/11/2023	401-09-2002		/ /		140.84
DETENTION		1650.36						
DD E029202		LUNA, TINO	PYRL FM-01/29/2023 TO-02/11/2023	500-49-2002		/ /		884.93
981.36			PYRL FM-01/29/2023 TO-02/11/2023	500-49-2002		/ /		5.67
02/16/2023			PYRL FM-01/29/2023 TO-02/11/2023	500-49-2002		/ /		90.76
COSSAP FEDERAL GRANT		981.36						
DD E029203		MILLER, EMILY P	PYRL FM-01/29/2023 TO-02/11/2023	401-09-2002		/ /		849.87
988.79			PYRL FM-01/29/2023 TO-02/11/2023	401-09-2002		/ /		51.76
02/16/2023			PYRL FM-01/29/2023 TO-02/11/2023	401-09-2002		/ /		87.16
DETENTION		988.79						
DD E029204		MONTOYA, ALICE	PYRL FM-01/29/2023 TO-02/11/2023	401-09-2002		/ /		802.94
885.29			PYRL FM-01/29/2023 TO-02/11/2023	401-09-2002		/ /		82.35
02/16/2023								
DETENTION		885.29						
DD E029205		MURATI, PAMELA	PYRL FM-01/29/2023 TO-02/11/2023	500-48-2002		/ /		366.25
695.44			PYRL FM-01/29/2023 TO-02/11/2023	500-48-2002		/ /		329.19
02/16/2023								
RISE GRANT		695.44						
DD E029206		NIEVES, SANTIAGO	PYRL FM-01/29/2023 TO-02/11/2023	401-09-2002		/ /		114.54
833.04			PYRL FM-01/29/2023 TO-02/11/2023	401-09-2002		/ /		718.50
02/16/2023								
DETENTION		833.04						
DD E029207		SCHMIDT, JEREMY	PYRL FM-01/29/2023 TO-02/11/2023	401-09-2002		/ /		927.75
1328.76			PYRL FM-01/29/2023 TO-02/11/2023	401-09-2002		/ /		95.13
02/16/2023			PYRL FM-01/29/2023 TO-02/11/2023	401-09-2005		/ /		210.68

CK#	DATE	Name	Description	Line Item	Invoice #	DATE	PO #	Amount
			PYRL FM-01/29/2023 TO-02/11/2023	401-09-2002		/ /		95.20
DETENTION		1328.76						
DD E029208		WHITEHEAD, TREVOR	PYRL FM-01/29/2023 TO-02/11/2023	401-09-2002		/ /		749.42
899.64			PYRL FM-01/29/2023 TO-02/11/2023	401-09-2005		/ /		150.22
02/16/2023								
DETENTION		899.64						
DD E029209		CRAWFORD, THOMAS EDWARD	PYRL FM-01/29/2023 TO-02/11/2023	405-67-2004		/ /		389.67
389.67								
02/16/2023								
LANDFILL		389.67						
DD E029210		SHETTER, TINA K	PYRL FM-01/29/2023 TO-02/11/2023	405-67-2004		/ /		446.77
446.77								
02/16/2023								
LANDFILL		446.77						
DD E029211		PESTAK, THOMAS	PYRL FM-01/29/2023 TO-02/11/2023	401-15-2001		/ /		524.41
524.41								
02/16/2023								
PROBATE JUDGE		524.41						
DD E029212		CARSON, ELIZABETH L	PYRL FM-01/29/2023 TO-02/11/2023	402-50-2002		/ /		489.74
746.26			PYRL FM-01/29/2023 TO-02/11/2023	405-67-2002		/ /		163.25
02/16/2023			PYRL FM-01/29/2023 TO-02/11/2023	402-50-2002		/ /		69.96
			PYRL FM-01/29/2023 TO-02/11/2023	405-67-2002		/ /		23.31
ROAD		559.70 LANDFILL	186.56					
DD E029213		CARSON, KARL L	PYRL FM-01/29/2023 TO-02/11/2023	402-50-2002		/ /		938.26
938.26								
02/16/2023								
ROAD		938.26						
DD E029214		CHAVEZ, JOSHUA D	PYRL FM-01/29/2023 TO-02/11/2023	402-50-2002		/ /		507.07
1014.18			PYRL FM-01/29/2023 TO-02/11/2023	402-50-2002		/ /		126.77
02/16/2023			PYRL FM-01/29/2023 TO-02/11/2023	402-50-2002		/ /		380.34
ROAD		1014.18						
DD E029215		FAULKNER, NEAL M	PYRL FM-01/29/2023 TO-02/11/2023	402-50-2002		/ /		747.78
854.61			PYRL FM-01/29/2023 TO-02/11/2023	402-50-2002		/ /		106.83
02/16/2023								
ROAD		854.61						
DD E029216		GREGORY, J WALTER	PYRL FM-01/29/2023 TO-02/11/2023	402-50-2002		/ /		746.51
746.51								
02/16/2023								
ROAD		746.51						

CK#	DATE	Name	Description	Line Item	Invoice #	DATE	PO #	Amount
DD E029217		LUCERO, ALBERT J	PYRL FM-01/29/2023 TO-02/11/2023	402-50-2002		/ /		799.79
847.47			PYRL FM-01/29/2023 TO-02/11/2023	402-50-2002		/ /		10.59
02/16/2023			PYRL FM-01/29/2023 TO-02/11/2023	402-50-2002		/ /		37.09
ROAD	847.47							
DD E029218		NEELEY, WILLIAM W	PYRL FM-01/29/2023 TO-02/11/2023	402-50-2002		/ /		1104.37
1299.26			PYRL FM-01/29/2023 TO-02/11/2023	405-67-2002		/ /		194.89
02/16/2023								
ROAD	1104.37	LANDFILL	194.89					
DD E029219		POWELL, CODY J	PYRL FM-01/29/2023 TO-02/11/2023	402-50-2002		/ /		581.93
775.93			PYRL FM-01/29/2023 TO-02/11/2023	402-50-2002		/ /		77.60
02/16/2023			PYRL FM-01/29/2023 TO-02/11/2023	402-50-2002		/ /		116.40
ROAD	775.93							
DD E029220		SHETTER, RICHARD L	PYRL FM-01/29/2023 TO-02/11/2023	402-50-2002		/ /		1189.83
1189.83								
02/16/2023								
ROAD	1189.83							
DD E029221		YOUNG, CALEB D	PYRL FM-01/29/2023 TO-02/11/2023	402-50-2002		/ /		655.60
874.14			PYRL FM-01/29/2023 TO-02/11/2023	402-50-2002		/ /		218.54
02/16/2023								
ROAD	874.14							
DD E029222		ANDERSON, SHERRY L	PYRL FM-01/29/2023 TO-02/11/2023	634-32-2002		/ /		889.54
1274.29			PYRL FM-01/29/2023 TO-02/11/2023	634-32-2005		/ /		337.92
02/16/2023			PYRL FM-01/29/2023 TO-02/11/2023	634-32-2002		/ /		46.83
DISPATCH	1274.29							
DD E029223		ATWELL, MICHELLE	PYRL FM-01/29/2023 TO-02/11/2023	634-32-2002		/ /		1123.80
1123.80								
02/16/2023								
DISPATCH	1123.80							
DD E029224		BILYEU, LANDEN M	PYRL FM-01/29/2023 TO-02/11/2023	634-32-2002		/ /		816.31
816.31								
02/16/2023								
DISPATCH	816.31							
DD E029225		BROWN, ALANA	PYRL FM-01/29/2023 TO-02/11/2023	634-32-2002		/ /		811.71
854.45			PYRL FM-01/29/2023 TO-02/11/2023	634-32-2002		/ /		42.74
02/16/2023								
DISPATCH	854.45							
DD E029226		CHERRY, CURTIS D	PYRL FM-01/29/2023 TO-02/11/2023	634-32-2002		/ /		934.56
934.56								
02/16/2023								
DISPATCH	934.56							

CK#	DATE	Name	Description	Line Item	Invoice #	DATE	PO #	Amount
DD E029227		CROM, NADINE	PYRL FM-01/29/2023 TO-02/11/2023	634-32-2002		/ /		762.87
1129.39			PYRL FM-01/29/2023 TO-02/11/2023	634-32-2005		/ /		175.80
02/16/2023			PYRL FM-01/29/2023 TO-02/11/2023	634-32-2002		/ /		190.72
DISPATCH	1129.39							
DD E029228		HENRY, JOSEPH A	PYRL FM-01/29/2023 TO-02/11/2023	634-32-2002		/ /		642.15
802.70			PYRL FM-01/29/2023 TO-02/11/2023	634-32-2002		/ /		160.55
02/16/2023								
DISPATCH	802.70							
DD E029229		LUNSFORD, KALLIE	PYRL FM-01/29/2023 TO-02/11/2023	634-32-2002		/ /		937.82
987.20			PYRL FM-01/29/2023 TO-02/11/2023	634-32-2002		/ /		49.38
02/16/2023								
DISPATCH	987.20							
DD E029230		REDDELL, IMIGEN A	PYRL FM-01/29/2023 TO-02/11/2023	634-32-2002		/ /		790.13
790.13								
02/16/2023								
DISPATCH	790.13							
DD E029231		STANLEY, JESSICA	PYRL FM-01/29/2023 TO-02/11/2023	634-32-2002		/ /		891.81
1153.07			PYRL FM-01/29/2023 TO-02/11/2023	634-32-2005		/ /		214.32
02/16/2023			PYRL FM-01/29/2023 TO-02/11/2023	634-32-2002		/ /		46.94
DISPATCH	1153.07							
DD E029232		TORREZ, CANDY	PYRL FM-01/29/2023 TO-02/11/2023	634-32-2002		/ /		1105.56
1360.87			PYRL FM-01/29/2023 TO-02/11/2023	634-32-2002		/ /		197.12
02/16/2023			PYRL FM-01/29/2023 TO-02/11/2023	634-32-2002		/ /		58.19
DISPATCH	1360.87							
DD E029233		YAW, LAKEN	PYRL FM-01/29/2023 TO-02/11/2023	634-32-2002		/ /		907.56
955.34			PYRL FM-01/29/2023 TO-02/11/2023	634-32-2002		/ /		47.78
02/16/2023								
DISPATCH	955.34							
DD E029234		APODACA, VINCENT E	PYRL FM-01/29/2023 TO-02/11/2023	401-08-2002		/ /		1290.57
1756.86			PYRL FM-01/29/2023 TO-02/11/2023	404-65-2002		/ /		149.97
02/16/2023			PYRL FM-01/29/2023 TO-02/11/2023	401-08-2005		/ /		316.32
LAW ENFORCEMENT	1606.89	WHITE SANDS MISSLE RAN	149.97					
DD E029235		AVALOS, ENRIQUE	PYRL FM-01/29/2023 TO-02/11/2023	401-08-2002		/ /		757.97
1010.64			PYRL FM-01/29/2023 TO-02/11/2023	401-08-2002		/ /		252.67
02/16/2023								
LAW ENFORCEMENT	1010.64							
DD E029236		BAKER, JOSHUA D	PYRL FM-01/29/2023 TO-02/11/2023	401-08-2001		/ /		1620.85
1620.85								
02/16/2023								
LAW ENFORCEMENT	1620.85							

CK#	DATE	Name	Description	Line Item	Invoice #	DATE	PO #	Amount
DD E029237		CARREON, ALEJANDRO I	PYRL FM-01/29/2023 TO-02/11/2023 401-08-2002			/ /		1199.14
1199.14								
02/16/2023								
LAW ENFORCEMENT		1199.14						
DD E029238		HAYES, KONNI J	PYRL FM-01/29/2023 TO-02/11/2023 401-08-2002			/ /		708.02
845.42			PYRL FM-01/29/2023 TO-02/11/2023 401-08-2002			/ /		52.85
02/16/2023			PYRL FM-01/29/2023 TO-02/11/2023 401-08-2002			/ /		84.55
LAW ENFORCEMENT		845.42						
DD E029239		MARIN, JOSE	PYRL FM-01/29/2023 TO-02/11/2023 401-08-2002			/ /		940.85
1084.42			PYRL FM-01/29/2023 TO-02/11/2023 404-65-2002			/ /		95.93
02/16/2023			PYRL FM-01/29/2023 TO-02/11/2023 401-08-2002			/ /		47.64
LAW ENFORCEMENT		988.49	WHITE SANDS MISSLE RAN	95.93				
DD E029240		MYERS, JUSTIN	PYRL FM-01/29/2023 TO-02/11/2023 401-08-2002			/ /		1107.47
1595.48			PYRL FM-01/29/2023 TO-02/11/2023 404-65-2002			/ /		106.77
02/16/2023			PYRL FM-01/29/2023 TO-02/11/2023 401-08-2005			/ /		381.24
LAW ENFORCEMENT		1488.71	WHITE SANDS MISSLE RAN	106.77				
DD E029241		SPENCER, BRADLEY M	PYRL FM-01/29/2023 TO-02/11/2023 401-08-2002			/ /		1071.59
1071.59								
02/16/2023								
LAW ENFORCEMENT		1071.59						
DD E029242		THOMPSON, KAREN L	PYRL FM-01/29/2023 TO-02/11/2023 401-08-2002			/ /		1065.50
1065.50								
02/16/2023								
LAW ENFORCEMENT		1065.50						
DD E029243		TREJO, JOEL	PYRL FM-01/29/2023 TO-02/11/2023 401-08-2002			/ /		776.45
1294.08			PYRL FM-01/29/2023 TO-02/11/2023 401-08-2002			/ /		517.63
02/16/2023								
LAW ENFORCEMENT		1294.08						
DD E029244		ZAGORSKI, ANTHONY C	PYRL FM-01/29/2023 TO-02/11/2023 401-08-2002			/ /		1016.49
1429.50			PYRL FM-01/29/2023 TO-02/11/2023 401-08-2005			/ /		413.01
02/16/2023								
LAW ENFORCEMENT		1429.50						
DD E029245		ZAVALA, ZACHARY	PYRL FM-01/29/2023 TO-02/11/2023 401-08-2002			/ /		1176.93
1410.69			PYRL FM-01/29/2023 TO-02/11/2023 404-65-2002			/ /		170.26
02/16/2023			PYRL FM-01/29/2023 TO-02/11/2023 401-08-2005			/ /		63.50
LAW ENFORCEMENT		1240.43	WHITE SANDS MISSLE RAN	170.26				
DD E029246		CHAVEZ, CANDACE D	PYRL FM-01/29/2023 TO-02/11/2023 401-07-2001			/ /		1870.30
1870.30								
02/16/2023								
TREASURERS		1870.30						

CK#	DATE	Name	Description	Line Item	Invoice #	DATE	PO #	Amount
DD E029247		GODFREY, JANET	PYRL FM-01/29/2023 TO-02/11/2023 401-07-2002			/ /		495.46
639.31			PYRL FM-01/29/2023 TO-02/11/2023 401-07-2002			/ /		63.95
02/16/2023			PYRL FM-01/29/2023 TO-02/11/2023 401-07-2002			/ /		79.90
TREASURERS	639.31							
DD E029248		HOLLY, JOSEPHINE E	PYRL FM-01/29/2023 TO-02/11/2023 401-07-2002			/ /		594.58
743.23			PYRL FM-01/29/2023 TO-02/11/2023 401-07-2002			/ /		148.65
02/16/2023								
TREASURERS	743.23							
DD E029249		ROBERTS, CONSTANCE	PYRL FM-01/29/2023 TO-02/11/2023 401-07-2002			/ /		499.42
499.42								
02/16/2023								
TREASURERS	499.42							
DD E029250		RODRIGUEZ, CINDY J	PYRL FM-01/29/2023 TO-02/11/2023 401-07-2002			/ /		1348.94
1348.94								
02/16/2023								
TREASURERS	1348.94							
DD E029251		APODACA, VINCENT E	PYRL FM-01/29/2023 TO-02/11/2023 604-85-2093			/ /		6296.42
6296.42								
02/16/2023								
LAW ENFORCEMENT PROTEC	6296.42							
DD E029252		AVALOS, ENRIQUE	PYRL FM-01/29/2023 TO-02/11/2023 604-85-2093			/ /		6296.42
6296.42								
02/16/2023								
LAW ENFORCEMENT PROTEC	6296.42							
DD E029253		CARREON, ALEJANDRO I	PYRL FM-01/29/2023 TO-02/11/2023 604-85-2093			/ /		6296.42
6296.42								
02/16/2023								
LAW ENFORCEMENT PROTEC	6296.42							
DD E029254		MARIN, JOSE	PYRL FM-01/29/2023 TO-02/11/2023 604-85-2093			/ /		6296.42
6296.42								
02/16/2023								
LAW ENFORCEMENT PROTEC	6296.42							
DD E029255		MYERS, JUSTIN	PYRL FM-01/29/2023 TO-02/11/2023 604-85-2093			/ /		6296.42
6296.42								
02/16/2023								
LAW ENFORCEMENT PROTEC	6296.42							
DD E029256		TREJO, JOEL	PYRL FM-01/29/2023 TO-02/11/2023 604-85-2093			/ /		6296.42
6296.42								
02/16/2023								
LAW ENFORCEMENT PROTEC	6296.42							

CK#	DATE	Name	Description	Line Item	Invoice #	DATE	PO #	Amount
DD E029257		ZAGORSKI, ANTHONY C	PYRL FM-01/29/2023 TO-02/11/2023	604-85-2093		/ /		6276.42
6276.42								
02/16/2023								
LAW ENFORCEMENT PROTEC 6276.42								
DD E029258		ZAVALA, ZACHARY	PYRL FM-01/29/2023 TO-02/11/2023	604-85-2093		/ /		6296.42
6296.42								
02/16/2023								
LAW ENFORCEMENT PROTEC 6296.42								
02 R 42786		HAMILTON, GLENN	PYRL FM-01/29/2023 TO-02/11/2023	401-08-2002		/ /		1592.67
1592.67								
02/16/2023								
LAW ENFORCEMENT 1592.67								
03 R128053		NM TAX & REVENUE DEPARTMENT	STATE DED	PAYDAY 02/02/2023 401-00-2001		/ /		88.62
8625.57			STATE DED	PAYDAY 02/02/2023 401-01-2002		/ /		500.10
02/17/2023			STATE DED	PAYDAY 02/02/2023 401-02-2002		/ /		119.20
			STATE DED	PAYDAY 02/02/2023 401-04-2001		/ /		96.71
			STATE DED	PAYDAY 02/02/2023 401-04-2002		/ /		131.19
			STATE DED	PAYDAY 02/02/2023 401-06-2001		/ /		79.30
			STATE DED	PAYDAY 02/02/2023 401-06-2002		/ /		201.45
			STATE DED	PAYDAY 02/02/2023 401-07-2001		/ /		81.72
			STATE DED	PAYDAY 02/02/2023 401-07-2002		/ /		142.52
			STATE DED	PAYDAY 02/02/2023 401-08-2001		/ /		83.78
			STATE DED	PAYDAY 02/02/2023 401-08-2002		/ /		796.75
			STATE DED	PAYDAY 02/02/2023 401-09-2002		/ /		462.50
			STATE DED	PAYDAY 02/02/2023 401-09-2004		/ /		40.68
			STATE DED	PAYDAY 02/02/2023 401-15-2001		/ /		35.69
			STATE DED	PAYDAY 02/02/2023 402-50-2002		/ /		402.23
			STATE DED	PAYDAY 02/02/2023 404-65-2002		/ /		38.26
			STATE DED	PAYDAY 02/02/2023 405-67-2002		/ /		18.63
			STATE DED	PAYDAY 02/02/2023 405-67-2004		/ /		7.23
			STATE DED	PAYDAY 02/02/2023 422-66-2002		/ /		42.17
			STATE DED	PAYDAY 02/02/2023 500-48-2002		/ /		39.25
			STATE DED	PAYDAY 02/02/2023 500-49-2002		/ /		23.22
			STATE DED	PAYDAY 02/02/2023 508-39-2002		/ /		8.43
			STATE DED	PAYDAY 02/02/2023 509-38-2002		/ /		26.76
			STATE DED	PAYDAY 02/02/2023 510-37-2002		/ /		67.43
			STATE DED	PAYDAY 02/02/2023 629-03-2002		/ /		162.86
			STATE DED	PAYDAY 02/02/2023 634-32-2002		/ /		716.61
			STATE DED	PAYDAY 02/16/2023 401-00-2001		/ /		88.62
			STATE DED	PAYDAY 02/16/2023 401-01-2002		/ /		500.10
			STATE DED	PAYDAY 02/16/2023 401-02-2002		/ /		119.20
			STATE DED	PAYDAY 02/16/2023 401-04-2001		/ /		96.71
			STATE DED	PAYDAY 02/16/2023 401-04-2002		/ /		131.19
			STATE DED	PAYDAY 02/16/2023 401-06-2001		/ /		79.30
			STATE DED	PAYDAY 02/16/2023 401-06-2002		/ /		167.76
			STATE DED	PAYDAY 02/16/2023 401-07-2001		/ /		81.72
			STATE DED	PAYDAY 02/16/2023 401-07-2002		/ /		142.52
			STATE DED	PAYDAY 02/16/2023 401-08-2001		/ /		83.78
			STATE DED	PAYDAY 02/16/2023 401-08-2002		/ /		736.85
			STATE DED	PAYDAY 02/16/2023 401-09-2002		/ /		487.93
			STATE DED	PAYDAY 02/16/2023 401-09-2004		/ /		40.68
			STATE DED	PAYDAY 02/16/2023 401-15-2001		/ /		35.69

CK#	DATE	Name	Description	Line Item	Invoice #	DATE	PO #	Amount
			STATE DED PAYDAY	02/16/2023 402-50-2002		/ /		409.77
			STATE DED PAYDAY	02/16/2023 404-65-2002		/ /		31.95
			STATE DED PAYDAY	02/16/2023 405-67-2002		/ /		18.63
			STATE DED PAYDAY	02/16/2023 405-67-2004		/ /		7.23
			STATE DED PAYDAY	02/16/2023 422-66-2002		/ /		44.06
			STATE DED PAYDAY	02/16/2023 500-48-2002		/ /		40.00
			STATE DED PAYDAY	02/16/2023 500-49-2002		/ /		23.77
			STATE DED PAYDAY	02/16/2023 508-39-2002		/ /		8.43
			STATE DED PAYDAY	02/16/2023 509-38-2002		/ /		26.76
			STATE DED PAYDAY	02/16/2023 510-37-2002		/ /		67.43
			STATE DED PAYDAY	02/16/2023 629-03-2002		/ /		162.86
			STATE DED PAYDAY	02/16/2023 634-32-2002		/ /		579.34

COMMISSIONERS	177.24	ADMINISTRATION	1000.20	FACILITIES MANAGEMENT	238.40
OFFICE OF COUNTY CLERK	455.80	PROPERTY ASSESSMENTS	527.81	TREASURERS	448.48
LAW ENFORCEMENT	1701.16	DETENTION	1031.79	PROBATE JUDGE	71.38
ROAD	812.00	WHITE SANDS MISSLE RAN	70.21	LANDFILL	51.72
REAPPRAISAL FUND	86.23	RISE GRANT	79.25	COSSAP FEDERAL GRANT	46.99
DWI PROGRAM FEES FUND	16.86	DWI DISTRIBUTION FUND	53.52	DWI GRANT FUND	134.86
EMERGENCY MGMT SERVICE	325.72	DISPATCH	1295.95		

****

03 R128054	NM STATE TREASURER - PERA	PERA LE DED PAYDAY	02/16/2023 401-08-2001			/ /		390.89
30088.37		PERA LE DED PAYDAY	02/16/2023 401-08-2002			/ /		2441.08
02/17/2023		PERA LE DED PAYDAY	02/16/2023 404-65-2002			/ /		112.83
		PERA LE MATCH PAYDAY	02/16/2023 401-08-2040			/ /		4032.43
		PERA RG DED PAYDAY	02/16/2023 401-01-2002			/ /		1587.13
		PERA RG DED PAYDAY	02/16/2023 401-02-2002			/ /		477.67
		PERA RG DED PAYDAY	02/16/2023 401-04-2001			/ /		278.13
		PERA RG DED PAYDAY	02/16/2023 401-04-2002			/ /		646.79
		PERA RG DED PAYDAY	02/16/2023 401-06-2001			/ /		289.81
		PERA RG DED PAYDAY	02/16/2023 401-06-2002			/ /		773.71
		PERA RG DED PAYDAY	02/16/2023 401-07-2002			/ /		505.95
		PERA RG DED PAYDAY	02/16/2023 401-08-2002			/ /		504.34
		PERA RG DED PAYDAY	02/16/2023 401-09-2002			/ /		1634.49
		PERA RG DED PAYDAY	02/16/2023 401-09-2004			/ /		142.18
		PERA RG DED PAYDAY	02/16/2023 402-50-2002			/ /		1645.44
		PERA RG DED PAYDAY	02/16/2023 405-67-2002			/ /		75.05
		PERA RG DED PAYDAY	02/16/2023 422-66-2002			/ /		179.58
		PERA RG DED PAYDAY	02/16/2023 500-48-2002			/ /		145.19
		PERA RG DED PAYDAY	02/16/2023 500-49-2002			/ /		147.77
		PERA RG DED PAYDAY	02/16/2023 508-39-2002			/ /		32.74
		PERA RG DED PAYDAY	02/16/2023 509-38-2002			/ /		140.94
		PERA RG DED PAYDAY	02/16/2023 510-37-2002			/ /		219.25
		PERA RG DED PAYDAY	02/16/2023 629-03-2002			/ /		539.21
		PERA RG DED PAYDAY	02/16/2023 634-32-2002			/ /		2048.12
		PERA RG MATCH PAYDAY	02/16/2023 401-01-2006			/ /		1466.15
		PERA RG MATCH PAYDAY	02/16/2023 401-02-2006			/ /		441.25
		PERA RG MATCH PAYDAY	02/16/2023 401-04-2006			/ /		854.41
		PERA RG MATCH PAYDAY	02/16/2023 401-06-2006			/ /		982.23
		PERA RG MATCH PAYDAY	02/16/2023 401-07-2006			/ /		467.17
		PERA RG MATCH PAYDAY	02/16/2023 401-08-2006			/ /		465.89
		PERA RG MATCH PAYDAY	02/16/2023 401-09-2006			/ /		1641.23
		PERA RG MATCH PAYDAY	02/16/2023 402-50-2006			/ /		1519.99
		PERA RG MATCH PAYDAY	02/16/2023 405-67-2006			/ /		69.34
		PERA RG MATCH PAYDAY	02/16/2023 422-66-2006			/ /		166.11
		PERA RG MATCH PAYDAY	02/16/2023 500-48-2006			/ /		134.12
		PERA RG MATCH PAYDAY	02/16/2023 500-49-2006			/ /		136.50
		PERA RG MATCH PAYDAY	02/16/2023 508-39-2006			/ /		30.24
		PERA RG MATCH PAYDAY	02/16/2023 509-38-2006			/ /		130.19

CK#	DATE	Name	Description	Line Item	Invoice #	DATE	PO #	Amount
			PERA RG MATCH PAYDAY 02/16/2023	510-37-2006		/ /		202.54
			PERA RG MATCH PAYDAY 02/16/2023	629-03-2006		/ /		498.11
			PERA RG MATCH PAYDAY 02/16/2023	634-32-2006		/ /		1891.98

LAW ENFORCEMENT	7834.63	WHITE SANDS MISSLE RAN	112.83	ADMINISTRATION	3053.28
FACILITIES MANAGEMENT	918.92	OFFICE OF COUNTY CLERK	1779.33	PROPERTY ASSESSMENTS	2045.75
TREASURERS	973.32	DETENTION	3417.90	ROAD	3165.43
LANDFILL	144.39	REAPPRAISAL FUND	345.69	RISE GRANT	279.31
COSSAP FEDERAL GRANT	284.27	DWI PROGRAM FEES FUND	62.98	DWI DISTRIBUTION FUND	271.13
DWI GRANT FUND	421.79	EMERGENCY MGMT SERVICE	1037.32	DISPATCH	3940.10

==========

03 R128055	DEPARTMENT OF THE TREASURY/FICA	FICA	DED	PAYDAY 02/16/2023	401-00-2001	/ /		153.81
23580.06		FICA	DED	PAYDAY 02/16/2023	401-01-2002	/ /		841.96
02/17/2023		FICA	DED	PAYDAY 02/16/2023	401-02-2002	/ /		260.55
		FICA	DED	PAYDAY 02/16/2023	401-04-2001	/ /		154.65
		FICA	DED	PAYDAY 02/16/2023	401-04-2002	/ /		345.63
		FICA	DED	PAYDAY 02/16/2023	401-06-2001	/ /		153.22
		FICA	DED	PAYDAY 02/16/2023	401-06-2002	/ /		433.40
		FICA	DED	PAYDAY 02/16/2023	401-07-2001	/ /		148.06
		FICA	DED	PAYDAY 02/16/2023	401-07-2002	/ /		296.45
		FICA	DED	PAYDAY 02/16/2023	401-08-2001	/ /		158.89
		FICA	DED	PAYDAY 02/16/2023	401-08-2002	/ /		1413.46
		FICA	DED	PAYDAY 02/16/2023	401-09-2002	/ /		965.28
		FICA	DED	PAYDAY 02/16/2023	401-09-2004	/ /		75.08
		FICA	DED	PAYDAY 02/16/2023	401-15-2001	/ /		43.17
		FICA	DED	PAYDAY 02/16/2023	402-50-2002	/ /		873.51
		FICA	DED	PAYDAY 02/16/2023	404-65-2002	/ /		57.65
		FICA	DED	PAYDAY 02/16/2023	405-67-2002	/ /		39.65
		FICA	DED	PAYDAY 02/16/2023	405-67-2004	/ /		57.98
		FICA	DED	PAYDAY 02/16/2023	422-66-2002	/ /		106.92
		FICA	DED	PAYDAY 02/16/2023	500-48-2002	/ /		80.73
		FICA	DED	PAYDAY 02/16/2023	500-49-2002	/ /		82.64
		FICA	DED	PAYDAY 02/16/2023	508-39-2002	/ /		18.20
		FICA	DED	PAYDAY 02/16/2023	509-38-2002	/ /		78.37
		FICA	DED	PAYDAY 02/16/2023	510-37-2002	/ /		116.36
		FICA	DED	PAYDAY 02/16/2023	629-03-2002	/ /		295.27
		FICA	DED	PAYDAY 02/16/2023	634-32-2002	/ /		1157.37
		FICA	MATCH	PAYDAY 02/16/2023	401-00-2007	/ /		153.82
		FICA	MATCH	PAYDAY 02/16/2023	401-01-2007	/ /		841.97
		FICA	MATCH	PAYDAY 02/16/2023	401-02-2007	/ /		260.56
		FICA	MATCH	PAYDAY 02/16/2023	401-04-2007	/ /		500.27
		FICA	MATCH	PAYDAY 02/16/2023	401-06-2007	/ /		586.52
		FICA	MATCH	PAYDAY 02/16/2023	401-07-2007	/ /		444.53
		FICA	MATCH	PAYDAY 02/16/2023	401-08-2007	/ /		1572.35
		FICA	MATCH	PAYDAY 02/16/2023	401-09-2007	/ /		1040.35
		FICA	MATCH	PAYDAY 02/16/2023	401-15-2007	/ /		43.17
		FICA	MATCH	PAYDAY 02/16/2023	402-50-2007	/ /		873.52
		FICA	MATCH	PAYDAY 02/16/2023	404-65-2007	/ /		57.65
		FICA	MATCH	PAYDAY 02/16/2023	405-67-2007	/ /		97.65
		FICA	MATCH	PAYDAY 02/16/2023	422-66-2007	/ /		107.04
		FICA	MATCH	PAYDAY 02/16/2023	500-48-2007	/ /		80.74
		FICA	MATCH	PAYDAY 02/16/2023	500-49-2007	/ /		82.65
		FICA	MATCH	PAYDAY 02/16/2023	508-39-2007	/ /		18.21
		FICA	MATCH	PAYDAY 02/16/2023	509-38-2007	/ /		78.37
		FICA	MATCH	PAYDAY 02/16/2023	510-37-2007	/ /		116.36
		FICA	MATCH	PAYDAY 02/16/2023	629-03-2007	/ /		295.27
		FICA	MATCH	PAYDAY 02/16/2023	634-32-2007	/ /		1157.36
		FICA	DED	PAYDAY 02/16/2023	604-85-2093	/ /		3381.76
		FICA	MATCH	PAYDAY 02/16/2023	604-85-2007	/ /		3381.68

CK#	DATE	Name	Description	Line Item	Invoice #	DATE	PO #	Amount

COMMISSIONERS	307.63	ADMINISTRATION	1683.93	FACILITIES MANAGEMENT	521.11
OFFICE OF COUNTY CLERK	1000.55	PROPERTY ASSESSMENTS	1173.14	TREASURERS	889.04
LAW ENFORCEMENT	3144.70	DETENTION	2080.71	PROBATE JUDGE	86.34
ROAD	1747.03	WHITE SANDS MISSLE RAN	115.30	LANDFILL	195.28
REAPPRAISAL FUND	213.96	RISE GRANT	161.47	COSSAP FEDERAL GRANT	165.29
DWI PROGRAM FEES FUND	36.41	DWI DISTRIBUTION FUND	156.74	DWI GRANT FUND	232.72
EMERGENCY MGMT SERVICE	590.54	DISPATCH	2314.73	LAW ENFORCEMENT PROTEC	6763.44

03 0128056	GLOBAL LIFE & ACCIDENT INSURANCE	GLBELIFE	DED	PAYDAY	02/16/2023	401-01-2002	/ /	22.00
206.00		GLBELIFE	DED	PAYDAY	02/16/2023	401-04-2002	/ /	8.00
02/17/2023		GLBELIFE	DED	PAYDAY	02/16/2023	401-06-2002	/ /	19.26
		GLBELIFE	DED	PAYDAY	02/16/2023	401-08-2002	/ /	24.00
		GLBELIFE	DED	PAYDAY	02/16/2023	401-09-2002	/ /	12.00
		GLBELIFE	DED	PAYDAY	02/16/2023	402-50-2002	/ /	43.75
		GLBELIFE	DED	PAYDAY	02/16/2023	405-67-2002	/ /	10.25
		GLBELIFE	DED	PAYDAY	02/16/2023	422-66-2002	/ /	12.74
		GLBELIFE	DED	PAYDAY	02/16/2023	629-03-2002	/ /	22.00
		GLBELIFE	DED	PAYDAY	02/16/2023	634-32-2002	/ /	32.00

ADMINISTRATION	22.00	OFFICE OF COUNTY CLERK	8.00	PROPERTY ASSESSMENTS	19.26
LAW ENFORCEMENT	24.00	DETENTION	12.00	ROAD	43.75
LANDFILL	10.25	REAPPRAISAL FUND	12.74	EMERGENCY MGMT SERVICE	22.00
DISPATCH	32.00				

03 R128057	BANK OF SOUTHWEST	BSW DD	DED	PAYDAY	02/16/2023	401-01-2002	/ /	200.00
200.00								
02/17/2023								

ADMINISTRATION	200.00

03 R128058	STATE EMPLOYEE CREDIT UN	NMSECU	DED	PAYDAY	02/16/2023	401-04-2002	/ /	83.63
283.63		NMSECU	DED	PAYDAY	02/16/2023	401-06-2002	/ /	119.75
02/17/2023		NMSECU	DED	PAYDAY	02/16/2023	422-66-2002	/ /	80.25

OFFICE OF COUNTY CLERK	83.63	PROPERTY ASSESSMENTS	119.75	REAPPRAISAL FUND	80.25

03 R128059	NAVY FEDERAL CREDIT UNION	NFCU2DD	DED	PAYDAY	02/16/2023	401-01-2002	/ /	300.00
300.00								
02/17/2023								

ADMINISTRATION	300.00

03 0128060	NEW YORK LIFE	NYLIFEIN	DED	PAYDAY	02/16/2023	401-01-2002	/ /	62.00
545.17		NYLIFEIN	DED	PAYDAY	02/16/2023	401-07-2002	/ /	12.00
02/17/2023		NYLIFEIN	DED	PAYDAY	02/16/2023	401-08-2002	/ /	71.98
		NYLIFEIN	DED	PAYDAY	02/16/2023	401-09-2002	/ /	47.00
		NYLIFEIN	DED	PAYDAY	02/16/2023	402-50-2002	/ /	163.68
		NYLIFEIN	DED	PAYDAY	02/16/2023	404-65-2002	/ /	6.47
		NYLIFEIN	DED	PAYDAY	02/16/2023	509-38-2002	/ /	27.00
		NYLIFEIN	DED	PAYDAY	02/16/2023	510-37-2002	/ /	27.00
		NYLIFEIN	DED	PAYDAY	02/16/2023	629-03-2002	/ /	20.00
		NYLIFEIN	DED	PAYDAY	02/16/2023	634-32-2002	/ /	108.04

ADMINISTRATION	62.00	TREASURERS	12.00	LAW ENFORCEMENT	71.98
DETENTION	47.00	ROAD	163.68	WHITE SANDS MISSLE RAN	6.47
DWI DISTRIBUTION FUND	27.00	DWI GRANT FUND	27.00	EMERGENCY MGMT SERVICE	20.00
DISPATCH	108.04				

CK#	DATE	Name	Description			Line Item	Invoice #	DATE	PO #	Amount
03 R128061		DEPARTMENT OF TREASURY/FED	FEDTAX	DED	PAYDAY	02/16/2023 401-00-2001		/ /		152.60
11388.11			FEDTAX	DED	PAYDAY	02/16/2023 401-01-2002		/ /		1402.40
02/17/2023			FEDTAX	DED	PAYDAY	02/16/2023 401-02-2002		/ /		298.75
			FEDTAX	DED	PAYDAY	02/16/2023 401-04-2001		/ /		279.78
			FEDTAX	DED	PAYDAY	02/16/2023 401-04-2002		/ /		460.67
			FEDTAX	DED	PAYDAY	02/16/2023 401-06-2001		/ /		191.48
			FEDTAX	DED	PAYDAY	02/16/2023 401-06-2002		/ /		403.65
			FEDTAX	DED	PAYDAY	02/16/2023 401-07-2001		/ /		248.34
			FEDTAX	DED	PAYDAY	02/16/2023 401-07-2002		/ /		449.36
			FEDTAX	DED	PAYDAY	02/16/2023 401-08-2001		/ /		266.12
			FEDTAX	DED	PAYDAY	02/16/2023 401-08-2002		/ /		1870.90
			FEDTAX	DED	PAYDAY	02/16/2023 401-09-2002		/ /		1210.18
			FEDTAX	DED	PAYDAY	02/16/2023 401-09-2004		/ /		67.63
			FEDTAX	DED	PAYDAY	02/16/2023 401-15-2001		/ /		82.90
			FEDTAX	DED	PAYDAY	02/16/2023 402-50-2002		/ /		1287.98
			FEDTAX	DED	PAYDAY	02/16/2023 404-65-2002		/ /		78.54
			FEDTAX	DED	PAYDAY	02/16/2023 405-67-2002		/ /		67.34
			FEDTAX	DED	PAYDAY	02/16/2023 405-67-2004		/ /		20.07
			FEDTAX	DED	PAYDAY	02/16/2023 422-66-2002		/ /		114.85
			FEDTAX	DED	PAYDAY	02/16/2023 500-48-2002		/ /		153.72
			FEDTAX	DED	PAYDAY	02/16/2023 500-49-2002		/ /		59.84
			FEDTAX	DED	PAYDAY	02/16/2023 508-39-2002		/ /		22.10
			FEDTAX	DED	PAYDAY	02/16/2023 509-38-2002		/ /		47.55
			FEDTAX	DED	PAYDAY	02/16/2023 510-37-2002		/ /		170.88
			FEDTAX	DED	PAYDAY	02/16/2023 629-03-2002		/ /		444.66
			FEDTAX	DED	PAYDAY	02/16/2023 634-32-2002		/ /		1515.82
			FEDTAX	DED	PAYDAY	02/16/2023 604-85-2093		/ /		20.00

COMMISSIONERS	152.60	ADMINISTRATION	1402.40	FACILITIES MANAGEMENT	298.75
OFFICE OF COUNTY CLERK	740.45	PROPERTY ASSESSMENTS	595.13	TREASURERS	697.70
LAW ENFORCEMENT	2137.02	DETENTION	1277.81	PROBATE JUDGE	82.90
ROAD	1287.98	WHITE SANDS MISSLE RAN	78.54	LANDFILL	87.41
REAPPRAISAL FUND	114.85	RISE GRANT	153.72	COSSAP FEDERAL GRANT	59.84
DWI PROGRAM FEES FUND	22.10	DWI DISTRIBUTION FUND	47.55	DWI GRANT FUND	170.88
EMERGENCY MGMT SERVICE	444.66	DISPATCH	1515.82	LAW ENFORCEMENT PROTEC	20.00

03 R128062		DEPARTMENT OF TREASURY/MEDICARE	MEDICR	DED	PAYDAY	02/16/2023 401-00-2001		/ /		35.97
5514.70			MEDICR	DED	PAYDAY	02/16/2023 401-01-2002		/ /		196.90
02/17/2023			MEDICR	DED	PAYDAY	02/16/2023 401-02-2002		/ /		60.94
			MEDICR	DED	PAYDAY	02/16/2023 401-04-2001		/ /		36.17
			MEDICR	DED	PAYDAY	02/16/2023 401-04-2002		/ /		80.83
			MEDICR	DED	PAYDAY	02/16/2023 401-06-2001		/ /		35.83
			MEDICR	DED	PAYDAY	02/16/2023 401-06-2002		/ /		101.37
			MEDICR	DED	PAYDAY	02/16/2023 401-07-2001		/ /		34.63
			MEDICR	DED	PAYDAY	02/16/2023 401-07-2002		/ /		69.32
			MEDICR	DED	PAYDAY	02/16/2023 401-08-2001		/ /		37.16
			MEDICR	DED	PAYDAY	02/16/2023 401-08-2002		/ /		330.58
			MEDICR	DED	PAYDAY	02/16/2023 401-09-2002		/ /		225.76
			MEDICR	DED	PAYDAY	02/16/2023 401-09-2004		/ /		17.56
			MEDICR	DED	PAYDAY	02/16/2023 401-15-2001		/ /		10.10
			MEDICR	DED	PAYDAY	02/16/2023 402-50-2002		/ /		204.27
			MEDICR	DED	PAYDAY	02/16/2023 404-65-2002		/ /		13.48
			MEDICR	DED	PAYDAY	02/16/2023 405-67-2002		/ /		9.28
			MEDICR	DED	PAYDAY	02/16/2023 405-67-2004		/ /		13.56
			MEDICR	DED	PAYDAY	02/16/2023 422-66-2002		/ /		25.00
			MEDICR	DED	PAYDAY	02/16/2023 500-48-2002		/ /		18.88
			MEDICR	DED	PAYDAY	02/16/2023 500-49-2002		/ /		19.33
			MEDICR	DED	PAYDAY	02/16/2023 508-39-2002		/ /		4.26
			MEDICR	DED	PAYDAY	02/16/2023 509-38-2002		/ /		18.33

CK#	DATE	Name	Description	Line Item	Invoice #	DATE	PO #	Amount
			MEDICR DED PAYDAY	02/16/2023 510-37-2002		/ /		27.21
			MEDICR DED PAYDAY	02/16/2023 629-03-2002		/ /		69.06
			MEDICR DED PAYDAY	02/16/2023 634-32-2002		/ /		270.67
			MEDICR MATCH PAYDAY	02/16/2023 401-00-2007		/ /		35.98
			MEDICR MATCH PAYDAY	02/16/2023 401-01-2007		/ /		196.92
			MEDICR MATCH PAYDAY	02/16/2023 401-02-2007		/ /		60.93
			MEDICR MATCH PAYDAY	02/16/2023 401-04-2007		/ /		117.00
			MEDICR MATCH PAYDAY	02/16/2023 401-06-2007		/ /		137.17
			MEDICR MATCH PAYDAY	02/16/2023 401-07-2007		/ /		103.97
			MEDICR MATCH PAYDAY	02/16/2023 401-08-2007		/ /		367.72
			MEDICR MATCH PAYDAY	02/16/2023 401-09-2007		/ /		243.30
			MEDICR MATCH PAYDAY	02/16/2023 401-15-2007		/ /		10.09
			MEDICR MATCH PAYDAY	02/16/2023 402-50-2007		/ /		204.30
			MEDICR MATCH PAYDAY	02/16/2023 404-65-2007		/ /		13.48
			MEDICR MATCH PAYDAY	02/16/2023 405-67-2007		/ /		22.85
			MEDICR MATCH PAYDAY	02/16/2023 422-66-2007		/ /		25.03
			MEDICR MATCH PAYDAY	02/16/2023 500-48-2007		/ /		18.88
			MEDICR MATCH PAYDAY	02/16/2023 500-49-2007		/ /		19.33
			MEDICR MATCH PAYDAY	02/16/2023 508-39-2007		/ /		4.26
			MEDICR MATCH PAYDAY	02/16/2023 509-38-2007		/ /		18.33
			MEDICR MATCH PAYDAY	02/16/2023 510-37-2007		/ /		27.22
			MEDICR MATCH PAYDAY	02/16/2023 629-03-2007		/ /		69.05
			MEDICR MATCH PAYDAY	02/16/2023 634-32-2007		/ /		270.68
			MEDICR DED PAYDAY	02/16/2023 604-85-2093		/ /		790.88
			MEDICR MATCH PAYDAY	02/16/2023 604-85-2007		/ /		790.88

COMMISSIONERS	71.95	ADMINISTRATION	393.82	FACILITIES MANAGEMENT	121.87
OFFICE OF COUNTY CLERK	234.00	PROPERTY ASSESSMENTS	274.37	TREASURERS	207.92
LAW ENFORCEMENT	735.46	DETENTION	486.62	PROBATE JUDGE	20.19
ROAD	408.57	WHITE SANDS MISSLE RAN	26.96	LANDFILL	45.69
REAPPRAISAL FUND	50.03	RISE GRANT	37.76	COSSAP FEDERAL GRANT	38.66
DWI PROGRAM FEES FUND	8.52	DWI DISTRIBUTION FUND	36.66	DWI GRANT FUND	54.43
EMERGENCY MGMT SERVICE	138.11	DISPATCH	541.35	LAW ENFORCEMENT PROTEC	1581.76

03 R128063	NM RETIREE HEALTH CARE AUTHORITY	RHCA DED PAYDAY	02/16/2023 401-01-2002		/ /		142.35
4001.89		RHCA DED PAYDAY	02/16/2023 401-02-2002		/ /		42.84
02/17/2023		RHCA DED PAYDAY	02/16/2023 401-04-2001		/ /		24.94
		RHCA DED PAYDAY	02/16/2023 401-04-2002		/ /		56.00
		RHCA DED PAYDAY	02/16/2023 401-06-2001		/ /		25.99
		RHCA DED PAYDAY	02/16/2023 401-06-2002		/ /		69.38
		RHCA DED PAYDAY	02/16/2023 401-07-2002		/ /		45.37
		RHCA DED PAYDAY	02/16/2023 401-08-2002		/ /		45.23
		RHCA DED PAYDAY	02/16/2023 401-09-2002		/ /		146.59
		RHCA DED PAYDAY	02/16/2023 401-09-2004		/ /		12.75
		RHCA DED PAYDAY	02/16/2023 402-50-2002		/ /		147.58
		RHCA DED PAYDAY	02/16/2023 405-67-2002		/ /		6.73
		RHCA DED PAYDAY	02/16/2023 422-66-2002		/ /		16.10
		RHCA DED PAYDAY	02/16/2023 500-48-2002		/ /		13.02
		RHCA DED PAYDAY	02/16/2023 500-49-2002		/ /		13.25
		RHCA DED PAYDAY	02/16/2023 508-39-2002		/ /		2.93
		RHCA DED PAYDAY	02/16/2023 509-38-2002		/ /		12.64
		RHCA DED PAYDAY	02/16/2023 510-37-2002		/ /		19.66
		RHCA DED PAYDAY	02/16/2023 629-03-2002		/ /		48.36
		RHCA DED PAYDAY	02/16/2023 634-32-2002		/ /		183.68
		RHCA MATCH PAYDAY	02/16/2023 401-01-2662		/ /		284.70
		RHCA MATCH PAYDAY	02/16/2023 401-02-2662		/ /		85.68
		RHCA MATCH PAYDAY	02/16/2023 401-04-2662		/ /		165.91
		RHCA MATCH PAYDAY	02/16/2023 401-06-2662		/ /		190.72
		RHCA MATCH PAYDAY	02/16/2023 401-07-2662		/ /		90.76

CK#	DATE	Name	Description	Line Item	Invoice #	DATE	PO #	Amount		
			RHCA MATCH PAYDAY 02/16/2023	401-08-2662		/ /		90.47		
			RHCA MATCH PAYDAY 02/16/2023	401-09-2662		/ /		318.71		
			RHCA MATCH PAYDAY 02/16/2023	402-50-2662		/ /		295.14		
			RHCA MATCH PAYDAY 02/16/2023	405-67-2662		/ /		13.46		
			RHCA MATCH PAYDAY 02/16/2023	422-66-2662		/ /		32.25		
			RHCA MATCH PAYDAY 02/16/2023	500-48-2662		/ /		26.04		
			RHCA MATCH PAYDAY 02/16/2023	500-49-2662		/ /		26.51		
			RHCA MATCH PAYDAY 02/16/2023	508-39-2662		/ /		5.87		
			RHCA MATCH PAYDAY 02/16/2023	509-38-2662		/ /		25.28		
			RHCA MATCH PAYDAY 02/16/2023	510-37-2662		/ /		39.33		
			RHCA MATCH PAYDAY 02/16/2023	629-03-2662		/ /		96.72		
			RHCA MATCH PAYDAY 02/16/2023	634-32-2662		/ /		367.38		
			RHCA SO DED PAYDAY 02/16/2023	401-08-2001		/ /		34.05		
			RHCA SO DED PAYDAY 02/16/2023	401-08-2002		/ /		212.65		
			RHCA SO DED PAYDAY 02/16/2023	404-65-2002		/ /		9.83		
			RHCA SO MATCH PAYDAY 02/16/2023	401-08-2662		/ /		513.04		

ADMINISTRATION	427.05	FACILITIES MANAGEMENT	128.52	OFFICE OF COUNTY CLERK	248.85
PROPERTY ASSESSMENTS	286.09	TREASURERS	136.13	LAW ENFORCEMENT	895.44
DETENTION	478.05	ROAD	442.72	LANDFILL	20.19
REAPPRAISAL FUND	48.35	RISE GRANT	39.06	COSSAP FEDERAL GRANT	39.76
DWI PROGRAM FEES FUND	8.80	DWI DISTRIBUTION FUND	37.92	DWI GRANT FUND	58.99
EMERGENCY MGMT SERVICE	145.08	DISPATCH	551.06	WHITE SANDS MISSLE RAN	9.83

==========

03 R128064	NATIONWIDE	D-COMP DED PAYDAY 02/16/2023	401-01-2002		/ /			65.00		
1065.00		D-COMP DED PAYDAY 02/16/2023	401-02-2002		/ /			55.00		
02/17/2023		D-COMP DED PAYDAY 02/16/2023	401-04-2001		/ /			35.00		
		D-COMP DED PAYDAY 02/16/2023	401-08-2002		/ /			140.38		
		D-COMP DED PAYDAY 02/16/2023	401-09-2002		/ /			30.00		
		D-COMP DED PAYDAY 02/16/2023	401-09-2004		/ /			50.00		
		D-COMP DED PAYDAY 02/16/2023	402-50-2002		/ /			230.00		
		D-COMP DED PAYDAY 02/16/2023	404-65-2002		/ /			9.62		
		D-COMP DED PAYDAY 02/16/2023	405-67-2002		/ /			10.00		
		D-COMP DED PAYDAY 02/16/2023	510-37-2002		/ /			15.00		
		D-COMP DED PAYDAY 02/16/2023	629-03-2002		/ /			100.00		
		D-COMP DED PAYDAY 02/16/2023	634-32-2002		/ /			325.00		

ADMINISTRATION	65.00	FACILITIES MANAGEMENT	55.00	OFFICE OF COUNTY CLERK	35.00
LAW ENFORCEMENT	140.38	DETENTION	80.00	ROAD	230.00
WHITE SANDS MISSLE RAN	9.62	LANDFILL	10.00	DWI GRANT FUND	15.00
EMERGENCY MGMT SERVICE	100.00	DISPATCH	325.00		

==========

03 R128065	BLUETARP FINANCIAL, INC.	CAPT ONE DED PAYDAY 02/16/2023	401-01-2002		/ /			350.00		
350.00										
02/17/2023										

ADMINISTRATION 350.00

==========

03 R128066	GO2BANK	GOTOBANK DED PAYDAY 02/16/2023	401-04-2001		/ /			200.00		
200.00										
02/17/2023										

OFFICE OF COUNTY CLERK 200.00

==========

03 R128067	AMAZON CAPITAL SERVICES, INC	KINETIC RECOVERY TOW ROPE	413-80-2999	2082023	02/08/2023	69822	389.97	129.99	3.00	
2234.40		CABALLO FIRE DEPT								
02/17/2023		INVOICE NO. 1NF6-DQYW-7CW4								
		INVOICE DATE 02/02/2023								
		SWEETENED COFFEE CREAMER	401-01-2225		/ /	69797	62.12	31.06	2.00	

CK#	DATE	Name	Description	Line Item	Invoice #	DATE	PO #	Amount		
			HANDI WIPES	401-01-2225		/ /	69797	40.84	20.42	2.00
			DURACELL BATTERIES D	401-01-2225		/ /	69797	44.72	22.36	2.00
			DURACELL BATTERIES AAA	401-01-2225		/ /	69797	82.68	41.34	2.00
			DURCELL BATTERIES AA	401-01-2225		/ /	69797	89.95	17.99	5.00
			AVIL DUAL ACTION	401-01-2225		/ /	69797	27.98	13.99	2.00
			MATTEL FELT TIP PENS	401-01-2225		/ /	69797	27.90	27.90	1.00
			DAWN POWERWASH DISH SPRAY	401-01-2225		/ /	69797	17.50	17.50	1.00
			RED SHARPIE MARKERS	401-01-2225		/ /	69797	21.77	21.77	1.00
			FRENCH VANILLA CREAMER	401-01-2225		/ /	69797	28.44	28.44	1.00
			WHITE STOCKCARD PAPER	401-01-2225		/ /	69797	14.29	14.29	1.00
			LIDS FOR 8 OZ COFFEE CUPS	401-01-2225		/ /	69797	13.99	13.99	1.00
			VANITY NAPKINS	401-01-2225		/ /	69797	28.56	28.56	1.00
			BIC DRY ERASE MARKERS	401-01-2225		/ /	69797	22.68	11.34	2.00
			PAPER TOWELS	401-01-2225		/ /	69797	86.30	43.15	2.00
			CLIPBOARDS	401-01-2225		/ /	69797	12.45	12.45	1.00
			SHARPIE PENS	401-01-2225		/ /	69797	17.49	17.49	1.00
			SHIPPING & HANDLING	401-01-2225		/ /	69797	5.99	5.99	1.00
			SIERRA COUNTY ADMINISTRATION							
			INVOICE NO. 11XX-CKHL-GG7G							
			INVOICE DATE 01/21/2023							
			INVOICE NO. 1N4R-D6NP-DXRR							
			INVOICE DATE 01/26/2023							
			PORTABLE PRINTER/SCAN	401-01-2225		/ /	69819	551.77	551.77	1.00
			CARRY CASE	401-01-2225		/ /	69819	38.99	38.99	1.00
			FOR REMOTE WORK-CPO				69819			
			SHIPPING & HANDLING	401-01-2225		/ /	69819	5.99	5.99	1.00
			SIERRA COUNTY ADMINISTRATION							
			INVOICE NO. 14TX-NKF3-13RD							
			INVOICE DATE 01/30/2023							
			TONER CARTRIDGE	401-04-2225	2092023	02/09/2023	69807	173.98	86.99	2.00
			SIERRA COUNTY CLERK							
			INVOICE NO. 1PVL-4CNL-VDKT							
			INVOICE DATE 01/28/2023							
			SMALL POST IT NOTE 18 PK	422-66-2225	2132023	02/13/2023	69788	10.48	10.48	1.00
			AAA BATTRIES 48 COUNT	422-66-2225		/ /	69788	17.58	17.58	1.00
			SMM PENCIL LEAD REFILLS 1082 CT	422-66-2225		/ /	69788	22.60	11.30	2.00
			DOUBLE SIDED ATTACHMENT TAPE	422-66-2225		/ /	69788	34.90	17.45	2.00
			NIKON CAMERA BATTERIES EN-EL23	422-66-2225		/ /	69788	32.52	10.84	3.00
			SIERRA COUNTY ASSESSOR							
			INVOICE NO. 1P7R-X6NH-931F							
			INVOICE DATE 01/20/2023							
			CANON INK	401-04-2225	2162023	02/16/2023	69774	187.98	93.99	2.00
			RESOLUTION BINDERS	401-04-2225		/ /	69774	121.99	121.99	1.00
			SIERRA COUNTY CLERK							
			INVOICE NO. 1JVK-41CY-1WRD							
			INVOICE DATE 01/16/2023							

CABALLO FIRE 389.97 ADMINISTRATION 1242.40 OFFICE OF COUNTY CLERK 483.95
REAPPRAISAL FUND 118.08

03 R128068	AMERICAN LINEN SUPPLY INC.	MATS,TOWELS,COVERALLS	402-50-2225	2142023	02/14/2023	69293	32.56	32.56	1.00
32.56		SIERRA COUNTY ROAD DEPT							
02/17/2023		INVOICE NO. 0778518							
		INVOICE DATE 02/10/2023							
		ACCOUNT NO. 141436-00000							

ROAD 32.56

03 R128069	AT&T	SIERRA COUNTY ROAD DEPT	402-50-2221	2072023	02/07/2023		47.88	47.88	1.00

CK#	DATE	Name	Description	Line Item	Invoice #	DATE	PO #	Amount		
147.21	02/17/2023		575-894-6881 ACCOUNT NO. 030 597 7303 001 BILL DATE 01/28/2023							
			HILLSBORO FIRE DEPT	407-75-2221	2152023	02/15/2023		53.29	53.29	1.00
			ACCOUNT NO. 030 602 3362 001 BILL DATE 01/31/2023 575-895-5368							
			HILLSBORO FIRE EMS	407-75-2221		/ /		46.04	46.04	1.00
			ACCOUNT NO. 050 512-0311 001 BILL DATE 02/01/2023 575-895-5047							
ROAD		47.88 HILLSBORO FIRE	99.33							
03 R128070	2049.13 02/17/2023	ATTENTI US. INC.	SIERRA COUNTY DWI INVOICE NO. AH-5043 JANUARY 2023 BILLING INVOICE DATE 02/01/2023	507-29-2032	2072023	02/07/2023	69344	170.89	170.89	1.00
			SIERRA COUNTY DWI INVOICE NO. R-68432 JANUARY 2023 BILLING INVOICE DATE 02/01/2023	507-29-2032		/ /	69344	1878.24	1878.24	1.00
ELECTRONIC MONITORING		2049.13								
03 R128071	14870.74 02/17/2023	BOHANNAN HUSTON	PROFESSIONAL SERVICES SIERRA COUNTY ROAD DEPT INVOICE NO. 000122833 INVOICE DATE 02/03/2023 PROJECT:20230425 JANUARY 2023	500-50-2745	2082023	02/08/2023	69707	14870.74	14870.74	1.00
ROAD		14870.74								
03 R128072	184.07 02/17/2023	BOUND TREE MEDICAL, LLC	OXYGEN REGULATOR WITH DSS HILLSBORO EMS INVOICE NO. 84846029 INVOICE DATE 02/02/2023 ACCOUNT NO. 107266	611-89-2225	2072023	02/07/2023	69803	38.49	38.49	1.00
			CPAP ADULT MEDIUM DISPOSABLE	611-89-2225		/ /	69803	145.58	72.79	2.00
HILLSBORO EMS		184.07								
03 R128073	3313.53 02/17/2023	BRETT HENRY	AIR CYLINDERS-COMPOSITE SALES TAX CABALLO FIRE DEPT INVOICE NO. 1055	413-80-2330 413-80-2330	2092023	02/09/2023	69694	2150.00	50.00	43.00
						/ /	69694	166.63	166.63	1.00
			HYDROSTATIC TESTING AIR CYLINDER	407-75-2330	2132023	02/13/2023	69696	650.00	50.00	13.00
			MILEAGE	407-75-2330		/ /	69696	115.20	.60	192.00
			TRAVEL HOURS	407-75-2330		/ /	69696	160.00	50.00	3.20
			GRT HILLSBORO FIRE DEPT INVOICE NO. 1057	407-75-2330		/ /	69696	71.70	71.70	1.00
CABALLO FIRE		2316.63 HILLSBORO FIRE	996.90							
03 R128074	80.20 02/17/2023	CABALLO EMERGENCY TRUCK REPAIR	REPLACE FUSE/ADD RESET BREAKER	409-77-2330	2152023	02/15/2023	69852	65.00	65.00	1.00
			PARTS	409-77-2330		/ /	69852	10.00	10.00	1.00
			TAX ON LABOR	409-77-2330		/ /	69852	5.20	5.20	1.00

CK#	DATE	Name	Description	Line Item	Invoice #	DATE	PO #	Amount		
			ARREY DERRY FIRE DEPT INVOICE NO. 4452 INVOICE DATE 12/01/2022							
ARREY/DERRY FIRE		80.20								
03 O128075 779.73 02/17/2023		CACA PASA, LLC	SIERRA COUNTY LANDFILL INVOICE NO. 12649 INVOICE DATE 02/02/2023	405-67-2335	2142023	02/14/2023	69210	779.73	779.73	1.00
LANDFILL		779.73								
03 R128076 14628.55 02/17/2023		CATERPILLAR FINANCIAL SERVICES	MOTOR GRADERS 120M2/Y9C00206,120M2/Y9C00209, 120M2/Y9C00208,120M2/Y9C00205 SIERRA COUNTY ROAD DEPT CONTRACT NO. 001-0987966-003, 001-0987966-002,001-0987966-001, 001-0987966-000 STATEMENT NO. 33487368 CUSTOMER NO. 2015601	402-50-2899	2142023	02/14/2023	69308	13523.68	13523.68	1.00
			WHEEL LOADER 926M/LTE05241 SIERRA COUNTY ROAD DEPT CONTRACT NO. 001-0924925-000 STATEMENT NO. 33481066	402-50-2899		/ /	69308	1104.87	1104.87	1.00
ROAD		14628.55								
03 R128077 10420.96 02/17/2023		CENTRAL NM CORRECTIONAL FACILITY	HOUSING & MEDICAL DEVON SCHINAGEL CJ89953 INVOICE NO. 7 G-23SCDC INVOICE DATE 02/09/2023	605-86-2889	2162023	02/16/2023	69273	5210.48	5210.48	1.00
			HOUSING & MEDICAL WESLEY WEBB CJ66705 INVOICE NO. 7 H-23SCDC INVOICE DATE 02/09/2023	605-86-2889		/ /	69273	5210.48	5210.48	1.00
CORRECTION FEES		10420.96								
03 R128078 3150.00 02/17/2023		CITY OF TRUTH OR CONSEQUENCES	ANIMAL SHELTER SERVICES JANUARY 2023 INVOICE NO. 282023	419-13-2902	2152023	02/15/2023	69219	3000.00	3000.00	1.00
			ANIMAL CONTROL CALLS JANUARY 2023 INVOICE NO. AC02082023	419-13-2903		/ /	69219	150.00	150.00	1.00
COMMUNITY PROJECTS		3150.00								
03 R128079 975.85 02/17/2023		CITY OF TRUTH OR CONSEQUENCES	SIERRA COUNTY COURTHOUSE 300 N DATE ST ACCOUNT NO. 2008-09672-00 SERVICE 12/29/2022 - 01/28/2023	401-02-2552	2152023A	02/15/2023		17.83	17.83	1.00
			PUBLIC HEALTH OFFICE 201 E FOURTH AVE ACCOUNT NO. 2008-09799-00 SERVICE 12/29/2022 - 01/28/2023	401-02-2552		/ /		476.72	476.72	1.00
			SIERRA COUNTY DETENTION 300 N DATE ST	401-02-2552		/ /		177.47	177.47	1.00

CK#	DATE	Name	Description	Line Item	Invoice #	DATE	PO #	Amount		
			ACCOUNT NO. 2008-09807-00							
			SERVICE 12/29/2022 - 01/28/2023							
			SIERRA COUNTY COURTHOUSE	401-02-2552		/ /		303.83	303.83	1.00
			300 N DATE ST							
			ACCOUNT NO. 2008-12848-00							
			SERVICE 12/29/2022 - 01/28/2023							
FACILITIES MANAGEMENT		975.85								
03 R128080		CONTECH CONSTRUCTION	24" HUGGER BANDS FOR CULVERT	402-50-2891	2142023	02/14/2023	69831	369.36	92.34	4.00
369.36			SIERRA COUNTY ROAD DEPT							
02/17/2023			INVOICE NO. 26451552							
			INVOICE DATE 02/08/2023							
ROAD		369.36								
03 R128081		COOPERATIVE EDUCATIONAL SERVICES	ARREY BALL PARK UPGRADES	502-56-2978	2082023	02/08/2023	69476	152684.41	152684.41	1.00
152684.41			SIERRA COUNTY ADMINISTRATION							
02/17/2023			DECEMBER 2022							
			INVOICE NO. 24-133474							
			INVOICE DATE 12/27/2022							
CAPITAL PROJECTS		152684.41								
03 R128082		CORTEZ GAS COMPANY, INC.	HILLSBORO FIRE DEPT	407-75-2552	2072023	02/07/2023		375.70	375.70	1.00
1647.30			LP7 01/05/2023							
02/17/2023			KINGSTON FIRE DEPT-SUB	407-75-2552		/ /		404.60	404.60	1.00
			LP2 01/05/2023							
			MONTICELLO FIRE DEPT	411-78-2552		/ /		289.00	289.00	1.00
			LP4 01/17/2023							
			CUCHILLO FIRE DEPT	411-78-2552		/ /		578.00	578.00	1.00
			LP3 01/25/2023							
			STATEMENT DATE 01/31/2023							
			ACCOUNT NO. 120103							
HILLSBORO FIRE		780.30	MONTICELLO FIRE	867.00						
03 R128083		DONA ANA COUNTY FINANCIAL SVS.	DAHLIA O'BRIEN	605-86-2800	2092023	02/09/2023	69841	6200.00	200.00	31.00
6200.00			JANUARY 2023							
02/17/2023										
CORRECTION FEES		6200.00								
03 R128084		EL PASO ELECTRIC COMPANY	ARREY FIRE STATION	409-77-2552	2152023	02/15/2023		845.68	845.68	1.00
948.01			1021 E GRAND PERCHA RD							
02/17/2023			ACCOUNT NO. 0635110000							
			BILL DATE 02/02/2023							
			ARREY DERRY FIRE DEPT	409-77-2552		/ /		43.48	43.48	1.00
			54015 ARREY SCHOOL RD							
			ACCOUNT NO. 2725110000							
			BILL DATE 02/02/2023							
			ARREY BALL PARK	401-02-2552		/ /		18.14	18.14	1.00
			56116 BALL PARK RD							
			ACCOUNT NO. 1635110000							
			BILL DATE 02/02/2023							
			ARREY SENIOR CENTER	401-02-2552		/ /		40.71	40.71	1.00
			57099 N HIGHWAY 187							
			ACCOUNT NO. 4635110000							
			BILL DATE 02/02/2023							

CK#	DATE	Name	Description	Line Item	Invoice #	DATE	PO #	Amount		
ARREY/DERRY FIRE	889.16	FACILITIES MANAGEMENT	58.85							
03 R128085		GARFIELD WATER ASSOCIATION	ARREY FIRE STATION	409-77-2552	2072023	02/07/2023		30.80	30.80	1.00
61.60			ACCOUNT NO. 00001284							
02/17/2023			BILL DATE 02/01/2023							
			ARREY SENIOR CENTER	401-02-2552	2092023	02/09/2023		30.80	30.80	1.00
			ACCOUNT NO. 00001111							
			BILL DATE 02/01/2023							
ARREY/DERRY FIRE	30.80	FACILITIES MANAGEMENT	30.80							
03 R128086		GPK MEDIA, LLC	SIERRA COUNTY ADMINISTRATION	401-01-2222	2082023	02/08/2023	69730	132.02	132.02	1.00
402.19			SIERRA COUNTY REGIONAL DISPATCH	634-32-2222		/ /	69730	94.94	94.94	1.00
02/17/2023			SIERRA COUNTY SHERIFF'S DEPT	401-08-2222		/ /	69730	175.23	175.23	1.00
			JANUARY LEGAL & CLASSIFIEDS							
			INVOICE NO. 247							
			INVOICE DATE 01/30/2023							
			INVOICE NO. 230							
			INVOICE DATE 01/30/2023							
ADMINISTRATION	132.02	DISPATCH	94.94	LAW ENFORCEMENT	175.23					
03 0128087		HILLSBORO MUTUAL DOMESTIC WATER	HILLSBORO FIRE DEPT	407-75-2552	2082023	02/08/2023		36.96	36.96	1.00
36.96			ACCOUNT NO. 79							
02/17/2023			01/01/2023 TO 02/01/2023							
HILLSBORO FIRE	36.96									
03 0128088		ID VILLE	ID MAKER SUPPLY BUNDLE	401-08-2225	2132023	02/13/2023	69823	239.00	239.00	1.00
265.51			SHIPPING AND HANDLING	401-08-2225		/ /	69823	26.51	26.51	1.00
02/17/2023			SIERRA COUNTY SHERIFF'S DEPT				69823			
			INVOICE NO. 4029413				69823			
			INVOICE DATE 02/07/2023				69823			
LAW ENFORCEMENT	265.51									
03 R128089		INDIGENT HEALTHCARE SOLUTION	GRT	401-00-2333	2082023	02/08/2023	69319	47.50	47.50	1.00
997.50			PROFESSIONAL SERVICES	401-00-2333		/ /	69319	950.00	950.00	1.00
02/17/2023			SIERRA COUNTY ADMINISTRATION							
			INVOICE NO. 75259							
			INVOICE DATE 02/01/2023							
			MARCH 2023							
COMMISSIONERS	997.50									
03 0128090		L.N. CURTIS & SONS	ANNUAL SERVICE AIR COMPRESSOR	410-74-2330	2072023	02/07/2023	69741	1375.00	1375.00	1.00
1980.10			NON AMBIANT AIR ANALYSIS	410-74-2330		/ /	69741	120.00	120.00	1.00
02/17/2023			TRAVEL HOURS	410-74-2330		/ /	69741	225.00	50.00	4.50
			TRAVEL MILEAGE	410-74-2330		/ /	69741	132.00	.60	220.00
			TAX ON LABOR	410-74-2330		/ /	69741	128.10	128.10	1.00
			WINSTON FIRE DEPT							
			INVOICE NO. INV672638							
			INVOICE DATE 01/31/2023							
			CUSTOMER NO. C35478							
WINSTON	1980.10									
03 0128091		LUNA COUNTY DETENTION CENTER	INMATE HOUSING JANUARY 2023	605-86-2889	2092023	02/09/2023	69271	97632.00	97632.00	1.00

CK#	DATE	Name	Description	Line Item	Invoice #	DATE	PO #	Amount		
98097.92			SIERRA COUNTY DETENTION							
02/17/2023			INVOICE NO. S612023							
			INVOICE DATE 02/01/2023							
			TRANSPORT AND GUARD	605-86-2889		/ /	69271	465.92	465.92	1.00
			JANUARY 2023							
			SIERRA COUNTY DETENTION							
			INVOICE NO. SM482023							
			INVOICE DATE 02/01/2023							
CORRECTION FEES	98097.92									
03 R128092		MES	STANDARD COAT	409-77-2999	2072023	02/07/2023	69138	9150.72	1143.84	8.00
24744.95			STANDASRD PANT	409-77-2999		/ /	69138	7189.04	898.63	8.00
02/17/2023			FIRE HELMET W/FACESHIELD	409-77-2999		/ /	69138	2302.48	287.81	8.00
			FIRE FIT GAUNTLET	409-77-2999		/ /	69138	632.88	79.11	8.00
			COBRA FIRE HOOD	409-77-2999		/ /	69138	343.92	42.99	8.00
			LEATHER BOOT	409-77-2999		/ /	69138	3414.88	426.86	8.00
			SHIPPING	409-77-2999		/ /	69138	182.00	182.00	1.00
			ARREY DERRY FIRE DEPT				69138			
			INVOICE NO. IN1793631							
			INVOICE DATE 11/23/2022							
			CUSTOMER NO. C57915							
			SCBA FLOW TESTS	411-78-2330	2132023	02/13/2023	69740	605.00	55.00	11.00
			PACKING PERFORMED	411-78-2330		/ /	69740	4.23	4.23	1.00
			ENERGIZER ALKALINE AA BATTERIES	411-78-2330		/ /	69740	44.64	.72	62.00
			TRAVEL CHARGE	411-78-2330		/ /	69740	100.00	100.00	1.00
			FUEL SURCHARGE	411-78-2330		/ /	69740	200.00	200.00	1.00
			SCBA REPAIR	411-78-2330		/ /	69740	51.43	51.43	1.00
			REG HOSE	411-78-2330		/ /	69740	517.83	517.83	1.00
			ENERGIZER 9V	411-78-2330		/ /	69740	5.90	2.95	2.00
			MONTICELLO FIRE DEPT							
			INVOICE NO. IN1830045							
			INVOICE DATE 02/10/2023							
			CUSTOMER NO. C57915							
ARREY/DERRY FIRE	23215.92	MONTICELLO FIRE	1529.03							
03 R128093		MICHAEL KOZLOSKI	DELL LATITUDE LAPTOP	401-09-2225	2152023	02/15/2023	69704	1400.00	1400.00	1.00
1425.00			LAPTOP CHARGER HP PAVILION 15	401-09-2225		/ /	69704	25.00	25.00	1.00
02/17/2023			SIERRA COUNTY DETENTION							
			INVOICE DATE 02/13/2023							
DETENTION	1425.00									
03 R128094		NANCE, PATO, AND STOUT, LLC.	LEGAL SERVICES JANUARY 2023	401-00-2771	2092023	02/09/2023	69217	7666.66	7666.66	1.00
8155.41			GRT	401-00-2771		/ /	69217	488.75	488.75	1.00
02/17/2023			SIERRA COUNTY ADMINISTRATION							
			INVOICE NO. 1402							
			INVOICE DATE 02/03/2023							
COMMISSIONERS	8155.41									
03 0128095		NEW MEXICO EMS BUREAU	RENEWAL FEE FOR MATT WEST MEDIC	633-44-2115	2082023	02/08/2023	69801	50.00	50.00	1.00
90.00			RENEWAL FEE FOR ASHLEE WEST AEMT	633-44-2115		/ /	69801	40.00	40.00	1.00
02/17/2023			LAS PALOMAS EMS							
			INVOICE NO. EMS2822							
			INVOICE DATE 02/01/2023							
LAS PALOMAS EMS	90.00									

CK#	DATE	Name	Description	Line Item	Invoice =	DATE	PO #	Amount		
03 R128096		NEW MEXICO GAS COMPANY	SIERRA COUNTY REGIONAL DISPATCH	634-32-2552	2072023	02/07/2023		63.00	63.00	1.00
243.10			1712 N DATE ST							
02/17/2023			ACCOUNT NO. 116349442-1409593-3							
			BILL DATE 01/19/2023							
			ARREY TRANSFER STATION	405-67-2552	2142023	02/14/2023		38.13	38.13	1.00
			HWY 187 ARREY							
			ACCOUNT NO. 044643001-0481084-0							
			BILL DATE 02/07/2023							
			ARREY FIRE DEPT	409-77-2552	2152023	02/15/2023		27.95	27.95	1.00
			ACCOUNT NO. 044303812-0477692-3							
			BILL DATE 02/07/2023							
			ARREY SENIOR CENTER	401-02-2552		/ /		114.02	114.02	1.00
			HWY 187							
			ACCOUNT NO. 044639901-0481053-4							

DISPATCH 63.00 LANDFILL 38.13 ARREY/DERRY FIRE 27.95
FACILITIES MANAGEMENT 114.02

03 0128097		O'REILLY AUTOMOTIVE STORES, INC	CABIN FILTER	402-50-2330	2072023	02/07/2023	69731	46.65	46.65	1.00
823.37			INVOICE NO. 2162-105516							
02/17/2023			INVOICE DATE 01/31/2023							
			AIR FILTER	402-50-2330		/ /	69731	102.99	102.99	1.00
			INVOICE NO. 2162-105662							
			INVOICE DATE 02/01/2023							
			BRAKE PADS, PAD SET,BRAKE ROTOR	402-50-2330		/ /	69731	356.78	356.78	1.00
			INVOICE NO. 2162-105693							
			INVOICE DATE 02/02/2023							
			WIPER FLUID	402-50-2330		/ /	69731	55.62	55.62	1.00
			INVOICE NO. 2162-105696							
			INVOICE DATE 02/02/2023							
			WIPER BLADE	402-50-2330		/ /	69731	29.90	29.90	1.00
			INVOICE NO. 2162-105701							
			INVOICE DATE 02/02/2023							
			CUSTOMER NO. 80397							
			SIERRA COUNTY ROAD DEPT							
			WIPER BLADE	402-50-2330	2142023	02/14/2023	69731	159.80	159.80	1.00
			INVOICE NO. 2162-106279							
			INVOICE DATE 02/08/2023							
			CUSTOMER NO 80397							
			SIERRA COUNTY ROAD DEPT							
			VARIOUS PARTS	402-50-2330	2152023	02/15/2023	69731	71.63	71.63	1.00
			INVOICE NO. 2162-106830							
			INVOICE DATE 02/15/2023							
			CUSTOMER NO. 80397							
			SIERRA COUNTY ROAD DEPT							

ROAD 823.37

03 0128098		PATTILLO, BROWN & HILL, LLP	FINAL BILL FOR FY2022	401-00-2770	2152023	02/15/2023	69215	7219.25	7219.25	1.00
7219.25			ANNUAL AUDIT							
02/17/2023			INVOICE NO. 463342							
			INVOICE DATE 01/31/2023							
			CLIENT NO. 88133							

COMMISSIONERS 7219.25

03 0128099		PESTAK, THOMAS	MILEAGE REIMBURSEMENT	401-15-2109	2132023	02/13/2023		136.80	.45	304.00
180.73			PROBATE COURT CONFERENCE							

CK#	DATE	Name	Description	Line Item	Invoice #	DATE	PO #	Amount		
	02/17/2023		ALBUQUERQUE, NM							
			MEAL REIMBURSEMENT	401-15-2110		/ /		43.93	43.93	1.00
			PROBATE COURT CONFERENCE							
			02/08/2023 - 02/10/2023							
			ALBUQUERQUE, NM							
PROBATE JUDGE		180.73								
03 R128100		PUBLIC SAFETY PSYCHOLOGY GROUP	INSTRUCTOR COURSE-NADINE CROM	634-32-2035	2142023	02/14/2023	69790	800.00	800.00	1.00
	862.00		GRT	634-32-2035		/ /	69790	62.00	62.00	1.00
	02/17/2023		SIERRA COUNTY REGIONAL DISPATCH							
			INVOICE NO. 26550							
			INVOICE DATE 02/09/2023							
DISPATCH		862.00								
03 O128101		QUADIENT FINANCE USA, INC.	SIERRA COUNTY ADMIN--POSTAGE	401-01-2220	2092023	02/09/2023		732.41	732.41	1.00
	732.41		ACCOUNT NO. 7900 0440 8084 1541							
	02/17/2023		JANUARY 2023							
ADMINISTRATION		732.41								
03 R128102		REDWOOD LABORATORY	DRUG TESTING	509-38-2225	2152023	02/15/2023	69316	17.00	17.00	1.00
	17.00		SIERRA COUNTY DWI							
	02/17/2023		INVOICE NO. 10738020231							
			INVOICE DATE 01/31/2023							
			ACCOUNT NO. 107380							
DWI DISTRIBUTION FUND		17.00								
03 O128103		REED'S TIRE	FLAT REPAIR	402-50-2330	2142023	02/14/2023	69315	15.00	15.00	1.00
	15.00		SIERRA COUNTY ROAD DEPT							
	02/17/2023		INVOICE NO. 12520							
			INVOICE DATE 02/13/2023							
ROAD		15.00								
03 O128104		REGION III EMS CORPORATE ACCOUNTS	HEALTHCARE PROVIDER CPR CARD	401-00-2232	2092023	02/09/2023	69824	119.00	7.00	17.00
	119.00		SIERRA COUNTY ADMINISTRATION				69824			
	02/17/2023		INVOICE NO 41930				69824			
			INVOICE DATE 02/06/2023							
COMMISSIONERS		119.00								
03 O128105		RENTOKIL NORTH AMERICA,INC	ARREY DERRY SUB	409-77-2550	2152023	02/15/2023	69332	26.70	26.70	1.00
	900.53		ARREY DERRY FIRE DEPT	409-77-2550		/ /	69332	32.04	32.04	1.00
	02/17/2023		CABALLO FIRE DEPT	413-80-2550		/ /	69332	52.34	52.34	1.00
			HILLSBORO FIRE DEPT SUB	407-75-2550		/ /	69332	37.38	37.38	1.00
			HILLSBORO FIRE DEPT	407-75-2550		/ /	69332	80.11	80.11	1.00
			MONTICELLO FIRE DEPT	411-78-2550		/ /	69332	42.73	42.73	1.00
			CUCHILLO FIRE DEPT	411-78-2550		/ /	69332	43.40	43.40	1.00
			WINSTON FIRE DEPT	410-74-2550		/ /	69332	74.77	74.77	1.00
			POVERTY CREEK FIRE DEPT	425-59-2550		/ /	69332	80.11	80.11	1.00
			WINSTON FIRE DEPT	410-74-2550		/ /	69332	61.74	61.74	1.00
			SIERRA COUNTY SHERIFF/ROAD	401-02-2550		/ /	69332	43.40	43.40	1.00
			SIERRA COUNTY DETENTIOM	401-02-2550		/ /	69332	65.10	65.10	1.00
			SIERRA COUNTY ADMINISTRATION	401-02-2550		/ /	69332	211.58	211.58	1.00
			LAS PALOMAS FIRE DEPT	414-83-2550		/ /	69332	49.13	49.13	1.00
			INVOICE NO. 192440C							

CK#	DATE	Name	Description	Line Item	Invoice #	DATE	PO #	Amount		
			INVOICE DATE 01/31/2023							
			BILL NO. 1138066							

ARREY/DERRY FIRE	58.74	CABALLO FIRE	52.34	HILLSBORO FIRE	117.49
MONTICELLO FIRE	86.13	WINSTON	136.51	POVERTY CREEK FIRE	80.11
FACILITIES MANAGEMENT	320.08	LAS PALOMAS FIRE	49.13		

03 R128106	SAMBA HOLDINGS,INC.	DRIVING RECORD MONITOR	401-00-2771	2072023	02/07/2023	69290	311.44	311.44	1.00
614.34		SIERRA COUNTY ADMINISTRATION							
02/17/2023		INVOICE NO. INV01046580							
		INVOICE DATE 01/31/2023							
		ACCOUNT NO. M00005132							
		DRIVING RECORD MONITOR	401-00-2771		/ /	69290	302.90	302.90	1.00
		SIERRA COUNTY ADMINISTRATION							
		INVOICE NO. INV01021885							
		INVOICE DATE 12/31/2022							
		ACCOUNT NO. M00005132							

COMMISSIONERS 614.34

03 R128107	SIERRA ELECTRIC CO-OP, INC.	HILLSBORO FIRE DEPT	407-75-2552	2072023	02/07/2023		197.94	197.94	1.00
1700.13		ACCOUNT NO. 17801,53201,742700,							
02/17/2023		747800							
		INVOICE NO. 130							
		HILLSBORO TV	407-75-2552		/ /		73.59	73.59	1.00
		ACCOUNT NO. 63701							
		WINSTON FIRE DEPT	410-74-2552		/ /		516.73	516.73	1.00
		ACCOUNT NO. 25901,446502,730200,							
		768500,768600							
		INVOICE NO. 5292							
		MONTICELLO FIRE DEPT	411-78-2552		/ /		101.62	101.62	1.00
		ACCOUNT NO. 81101							
		CUCHILLO FIRE DEPT	411-78-2552		/ /		76.42	76.42	1.00
		ACCOUNT NO. 64700							
		CABALLO FIRE DEPT	413-80-2552		/ /		232.94	232.94	1.00
		ACCOUNT NO. 128201,744400,744500							
		INVOICE NO. 5342							
		LAS PALOMAS FIRE DEPT	414-83-2552		/ /		78.31	78.31	1.00
		ACCOUNT NO. 145001							
		POVERTY CREEK FIRE DEPT	425-59-2552		/ /		343.38	343.38	1.00
		ACCOUNT NO. 643100							
		HILLSBORO TRANSFER STATION	405-67-2552		/ /		32.04	32.04	1.00
		ACCOUNT NO. 63801							
		WINSTON TRANSFER STATION	405-67-2552		/ /		47.16	47.16	1.00
		ACCOUNT NO. 31101							
		BILL DATE 02/02/2023							
		BILLING PERIOD JANUARY 2023							

HILLSBORO FIRE	271.53	WINSTON	516.73	MONTICELLO FIRE	178.04
CABALLO FIRE	232.94	LAS PALOMAS FIRE	78.31	POVERTY CREEK FIRE	343.38
LANDFILL	79.20				

03 R128108	SIERRA VISTA HOSPITAL	DRUG SCREEN	401-00-2772	2152023	02/15/2023	69766	50.00	50.00	1.00
100.00		JOHN W GREGORY				69766			
02/17/2023		ROAD DEPT				69766			
		PATIENT NO. 80650							
		CLAIM ID 621709V15467							
		DRUG SCREEN	401-00-2772		/ /	69771	50.00	50.00	1.00
		VIRGINIA WOMACK				69771			

Ck#	DATE	Name	Description	Line Item	Invoice #	DATE	PO #	Amount		
			ASSESSOR				69771			
			PATIENT NO. S9429							
			CLAIM ID 621050V15467							
COMMISSIONERS	100.00									
03 R128109		SIERRA VISTA HOSPITAL	MEDICAL CLEARANCE FOR	401-08-2883	2132023	02/13/2023	69356	429.22	429.22	1.00
429.22			RANDALL GRIMES							
02/17/2023			PATIENT NO. 624949V15467							
			SIERRA COUNTY SHERIFF'S DEPT							
LAW ENFORCEMENT	429.22									
03 R128110		SOCORRO COUNTY DETENTION CENTER	INMATE HOUSING JANUARY 2023	605-86-2889	2092023	02/09/2023	69272	7800.00	7800.00	1.00
7800.00			SIERRA COUNTY DETENTION							
02/17/2023			INVOICE NO. 23DC-036							
			INVOICE DATE 02/06/2023							
CORRECTION FEES	7800.00									
03 0128111		SOUTHWEST ANALYTICAL SERVICES-	INIQUID WASTE TESTING	405-67-2925	2142023	02/14/2023	69284	96.40	96.40	1.00
96.40			SIERRA COUNTY LANDFILL							
02/17/2023			INVOICE NO. 24473							
			INVOICE DATE 02/08/2023							
LANDFILL	96.40									
03 R128112		STATE OF NEW MEXICO	JANUARY ROYALTY	402-50-2891	2082023	02/08/2023	69838	649.00	649.00	1.00
649.00			LEASE NO. HA-332-0				69838			
02/17/2023			SIERRA COUNTY ROAD DEPT							
			JANUARY 2023 REPORT							
			INVOICE DATE 02/07/2023							
ROAD	649.00									
03 R128113		SUN VALLEY, INCORPORATED	BULB	401-02-2550	2072023	02/07/2023	69286	41.97	41.97	1.00
177.96			SIERRA COUNTY FACILITIES MGMT							
02/17/2023			INVOICE NO. 167870/6							
			INVOICE DATE 02/06/2023							
			CUSTOMER NO. 3082							
			SPADE BIT	401-02-2550	2102023	02/10/2023	69286	6.99	6.99	1.00
			SIERRA COUNTY FACILITIES MGMT							
			INVOICE NO. 167940/6							
			INVOICE DATE 02/10/2023							
			CUSTOMER NO. 3082							
			FLOAT ROD,FLOAT,KEY	401-02-2550		/ /	69286	13.25	13.25	1.00
			SIERRA COUNTY FACILITIES MGMT							
			INVOICE NO. 167846/6							
			INVOICE DATE 02/03/2023							
			CUSTOMER NO. 3082							
			CIRCUIT BREAKER,POLE BREAKER	401-02-2550	2152023	02/15/2023	69286	78.46	78.46	1.00
			BALLAST							
			SIERRA COUNTY FACILITIES MGMT							
			INVOICE NO. 167995/6							
			INVOICE DATE 02/14/2023							
			CUSTOMER NO. 3082							
			FUSE, BOX CONNECTOR	401-02-2550		/ /	69286	37.28	37.28	1.00
			SIERRA COUNTY FACILITIES MGMT							
			INVOICE NO. 167982/6							

CK#	DATE	Name	Description	Line Item	Invoice #	DATE	PO #	Amount		
			INVOICE DATE 02/14/2023							
			INVOICE DATE 02/14/2023							
			CUSTOMER NO. 3082							
FACILITIES MANAGEMENT 177.95										
03 R128114		TALON SEPTIC AND POTTY SERVICE	PORTA POT RENTAL	401-08-2887	2092023	02/09/2023	69505	150.00	150.00	1.00
150.00			SIERRA COUNTY SHERIFF'S DEPT				69505			
02/17/2023			JANUARY 2023							
			INVOICE NO. 336							
			INVOICE DATE 01/31/2023							
			CUSTOMER ID C295							
LAW ENFORCEMENT 150.00										
03 O128115		TDS BROADBAND LLC	SIERRA COUNTY REGIONAL DISPATCH	634-32-2221	2092023	02/09/2023		263.72	263.72	1.00
263.72			ACCOUNT NO. 8224 30 007 0080814							
02/17/2023			BILL DATE 01/24/2023							
			ACCOUNT NO. 8224 30 007 0010605							
			BILL DATE 02/01/2023							
DISPATCH 263.72										
03 R128116		TERESA SOPKOWIAK	MILEAGE REIMBURSEMENT	401-04-2441	2152023	02/15/2023		184.50	.45	410.00
184.50			PROBATE CLASS							
02/17/2023			ALBUQUERQUE, NM							
OFFICE OF COUNTY CLERK 184.50										
03 R128117		THE MASTER'S TOUCH, LLC	POSTAGE	401-06-2220	2152023	02/15/2023	69851	7334.81	7334.81	1.00
7334.81			ASSESSOR'S OFFICE							
02/17/2023			INVOICE NO. E85120							
			INVOICE DATE 01/04/2023							
PROPERTY ASSESSMENTS 7334.81										
03 R128118		THE OLIVE TREE	SIERRA COUNTY GRANT PROGRAM	500-49-2106	2102023	02/10/2023	69351	$578.61	$578.61	1.00
5578.61			COSSAP GRANT							
02/17/2023			JANUARY 2023 INVOICES							
			INVOICE DATE 01/31/2023							
COSSAP FEDERAL GRANT 5578.61										
03 R128119		TRIADIC ENTERPRISES, INC.	CONTRACT CHARGES	401-00-2333	2082023	02/08/2023	69307	$236.44	$236.44	1.00
5625.64			CONTRACT CHARGES	401-07-2333		/ /	69307	81.28	81.28	1.00
02/17/2023			SIERRA COUNTY ADMINISTRATION							
			JANUARY 2023							
			INVOICE NO. 1078977:20:12							
			ACCOUNT NO. 1251							
			BUSINESS LICENSE PAPER	401-04-2225	2162023	02/16/2023	69775	137.29	137.29	1.00
			MARRIAGE LICENSE PAPER	401-04-2225		/ /	69775	90.63	90.63	1.00
			SHIPPING	401-04-2225		/ /	69775	80.00	80.00	1.00
			SIERRA COUNTY CLERK'S OFFICE							
			INVOICE NO. 1701846							
			INVOICE DATE 02/09/2023							
COMMISSIONERS 5236.44 TREASURERS 81.28 OFFICE OF COUNTY CLERK 307.92										
03 R128120		ULINE, INC	DELUXE WORKSTATION LED LIGHT	407-75-2999	2082023	02/08/2023	69820	115.00	115.00	1.00

CK#	DATE	Name	Description	Line Item	Invoice #	DATE	PO #	Amount		
2533.10			BOTTOM SHELF DIVIDERS 2/SET	407-75-2999		/ /	69820	98.00	49.00	2.00
02/17/2023			SIDE AND BACK LEDGES 72X36	407-75-2999		/ /	69820	64.00	64.00	1.00
			DELUXE WORKSTATION SHELF	407-75-2999		/ /	69820	67.00	67.00	1.00
			STARTER TABLE W/MAPLE TOP	407-75-2999		/ /	69820	975.00	975.00	1.00
			BOX SHELF WITH DIVIDERS	407-75-2999		/ /	69820	165.00	165.00	1.00
			TABLE SIDE & BACK LEDGES	407-75-2999		/ /	69820	64.00	64.00	1.00
			TABLE LEG OUTLET	407-75-2999		/ /	69820	94.00	47.00	2.00
			CASTERS FOR TABLE SET /4 CARTON	407-75-2999		/ /	69820	85.00	85.00	1.00
			INDUSTRIAL TABLE/COMPOSITE WOOD	407-75-2999		/ /	69820	290.00	290.00	1.00
			SHIPPING/FREIGHT	407-75-2999		/ /	69820	516.10	516.10	1.00
			HILLSBORO FIRE DEPT							
			INVOICE NO. 159214593							
			INVOICE DATE 01/26/2023							
			CUSTOMER NO. 15982377							
HILLSBORO FIRE		2533.10								
03 R128121		US DISTRIBUTING, INC.	EXHAUST EMISSION	402-50-2330	2072023	02/07/2023	69639	197.74	197.74	1.00
197.74			SIERRA COUNTY ROAD DEPT							
02/17/2023			INVOICE NO. 660935							
			INVOICE DATE 02/06/2023							
			CUSTOMER NO. 589							
ROAD		197.74								
03 0128122		VERIZON WIRELESS SERVICES	CABALLO FIRE DEPT	413-80-2221	2072023	02/07/2023	69291	46.05	46.05	1.00
1839.85			575-740-7139							
02/17/2023			ACCOUNT NO. 507280602-00001							
			INVOICE NO. 9926208995							
			BILL DATE 01/25/2023							
			EMERGENCY SERVICES	426-45-2221		/ /	69260	40.01	40.01	1.00
			575-740-9759							
			ACCOUNT NO. 507280602-00008							
			INVOICE NO. 9926208998							
			BILL DATE 01/25/2023							
			SIERRA COUNTY DWI	509-38-2221		/ /	69256	140.60	140.60	1.00
			575-740-2147							
			575-740-7567							
			575-894-0300							
			575-894-9265							
			ACCOUNT NO. 507280602-00004							
			INVOICE NO. 9926208996							
			BILL DATE 01/25/2023							
			SIERRA COUNTY ROAD DEPT	402-50-2221		/ /	69257	86.28	86.28	1.00
			575-740-0695							
			575-740-7347							
			ACCOUNT NO. 707251276-00001							
			INVOICE NO. 9926232256							
			BILL DATE 01/25/2023							
			SIERRA COUNTY ADMINISTRATION	401-00-2221	2082023	02/08/2023		1012.65	1012.65	1.00
			ACCOUNT NO. 507280602-00010							
			INVOICE NO. 9926209000							
			BILL DATE 01/25/2023							
			SIERRA COUNTY ADMINISTRATION	401-01-2221		/ /	69254	92.10	92.10	1.00
			HR & PROCUREMENT							
			575-740-6639							
			575-740-8010							
			ACCOUNT NO. 507280602-00011							
			INVOICE NO. 9926209001							

CK#	DATE	Name	Description	Line Item	Invoice #	DATE	PO #	Amount		
			BILL DATE 01/25/2023							
			SIERRA COUNTY PROBATE JUDGE	401-15-2221		/ /	69255	108.04	108.04	1.00
			575-740-4900							
			ACCOUNT NO. 507280602-00009							
			INVOICE NO. 9926208999							
			BILL DATE 01/25/2023							
			SIERRA COUNTY FACILITIES MGMT	401-02-2221	2102023	02/10/2023	69268	314.12	314.12	1.00
			575-740-2359							
			575-740-6294							
			ACCOUNT NO. 507280602-00005							
			INVOICE NO. 9926208997							
			BILL DATE 01/25/2023							

CABALLO FIRE	46.05	FIRE ADMINISTRATOR	40.01	DWI DISTRIBUTION FUND	140.60
ROAD	86.28	COMMISSIONERS	1012.65	ADMINISTRATION	92.10
PROBATE JUDGE	108.04	FACILITIES MANAGEMENT	314.12		

03 R128123	WALDRUM, RUANNA	WEB SERVICES	401-00-2771	2072023	02/07/2023	69216	886.29	886.29	1.00
886.29		SIERRA COUNTY ADMINISTRATION							
02/17/2023		INVOICE NO. 0001253							
		INVOICE DATE 12/31/2022							

COMMISSIONERS 886.29

03 0128124	WILSON & COMPANY, INC., ENGINEER	PROFESSIONAL SERVICES	502-56-2982	2152023	02/15/2023	68827	751.64	751.64	1.00
5577.54		09/10/2022 TO 10/07/2022							
02/17/2023		INVOICE NO. 110492							
		INVOICE DATE 10/21/2022							
		PROJECT NO. 2260012000							
		PROFESSIONAL SERVICES	502-56-2982		/ /	68827	2280.56	2280.56	1.00
		10/08/2022 TO 11/04/2022							
		INVOICE NO. 111344							
		INVOICE DATE 11/18/2022							
		PROJECT NO. 2260012000							
		PROFESSIONAL SERVICES	502-56-2982		/ /	68827	837.06	837.06	1.00
		11/05/2022 TO 12/02/2022							
		INVOICE NO. 112226							
		INVOICE DATE 12/19/2022							
		PROJECT NO. 2260012000							
		PROFESSIONAL SERVICES	502-56-2982		/ /	68827	1708.28	1708.28	1.00
		12/01/2022 TO 12/30/2022							
		INVOICE NO. 112797							
		INVOICE DATE 01/16/2023							
		PROJECT NO. 2260012000							
		SIERRA COUNTY ADMINISTRATION							

CAPITAL PROJECTS 5577.54

03 0128125	WINDSTREAM	SIERRA COUNTY DETENTION	401-09-2221	2092023	02/09/2023		97.45	97.45	1.00
529.57		ACCOUNT NO. 100802369							
02/17/2023		575-894-6224							
		INVOICE DATE 02/03/2023							
		CUCHILLO FIRE DEPT	411-78-2221	2152023	02/15/2023		146.22	146.22	1.00
		ACCOUNT NO. 100847920							
		575-743-0239							
		INVOICE DATE 02/09/2023							
		LAS PALOMAS FIRE DEPT	414-83-2221		/ /		165.82	165.82	1.00
		ACCOUNT NO. 100287087							
		575-894-1553							

CK#	DATE	Name	Description	Line Item	Invoice #	DATE	PO #	Amount		
			INVOICE DATE 02/09/2023							
			SIERRA COUNTY CLERK/ELECTIONS	401-05-2221	2162023	02/16/2023		120.08	120.08	1.00
			ACCOUNT NO. 100916428							
			575-895-3396							
			INVOICE DATE 02/03/2023							

DETENTION 97.45 MONTICELLO FIRE 146.22 LAS PALOMAS FIRE 165.82
BUREAU OF ELECTIONS 120.08

03 0128126		WINSTON GENERAL STORE	UNLEADED	410-74-2441	2072023	02/07/2023	69235	69.00	69.00	1.00
69.00			JANUARY 2023							
02/17/2023			INVOICE DATE 01/30/2023							

WINSTON 69.00

03 R128127		WNM COMMUNICATIONS	POVERTY CREEK FIRE DEPT	425-59-2221	2072023	02/07/2023		75.20	75.20	1.00
75.20			ACCOUNT NO. 0000015307							
02/17/2023			575-772-5111							
			BILL DATE 02/01/2023							

POVERTY CREEK FIRE 75.20

03 R128128		XEROX CORPORATION	SIERRA COUNTY ADMINISTRATION	401-01-2898	2162023	02/16/2023	69248	297.54	297.54	1.00
2368.22			INVOICE NO. 018133094							
02/17/2023			CUSTOMER NO. 726306996							
			MONTHLY MAINTENANCE	401-06-2898		/ /	69252	276.78	276.78	1.00
			BLACK COPIES	401-06-2898		/ /	69252	4.99	4.99	1.00
			COLOR COPIES	401-06-2898		/ /	69252	46.70	46.70	1.00
			GRT	401-06-2898		/ /	69252	27.92	27.92	1.00
			SIERRA COUNTY ASSESSOR							
			INVOICE NO. 018133096							
			CUSTOMER NO. 726307044							
			SIERRA COUNTY CLERK	624-87-2898		/ /	69328	174.67	174.67	1.00
			INVOICE NO. 018133097							
			CUSTOMER NO. 726307051							
			SC DETENTION-BOOKING	401-09-2898		/ /	69250	229.87	229.87	1.00
			INVOICE NO. 018133085							
			CUSTOMER NO. 722396967							
			SIERRA COUNTY DETENTION-OFFICE	401-09-2898		/ /	69250	195.10	195.10	1.00
			INVOICE NO. 018133084							
			CUSTOMER NO. 722396934							
			SIERRA COUNTY DWI	509-38-2898		/ /	69318	237.02	237.02	1.00
			INVOICE NO. 018133081							
			CUSTOMER NO. 720595941							
			SIERRA COUNTY ROAD DEPT	402-50-2898		/ /	69269	169.48	169.48	1.00
			INVOICE NO. 018133088							
			CUSTOMER NO. 722594934							
			SIERRA COUNTY REGIONAL DISPATCH	634-32-2898		/ /	69251	262.85	262.85	1.00
			INVOICE NO. 018133095							
			CUSTOMER NO. 726307010							
			SIERRA COUNTY SHERIFF'S DEPT	401-08-2898		/ /	69249	201.85	201.85	1.00
			INVOICE NO. 018133087							
			CUSTOMER NO. 722594926							
			SIERRA COUNTY TREASURER	401-07-2898		/ /	69294	243.45	243.45	1.00
			INVOICE NO. 018133082							
			CUSTOMER NO. 721050037							
			JANUARY 2023 BILLING							
			INVOICE DATE 02/01/2023							

ADMINISTRATION 297.54 PROPERTY ASSESSMENTS 356.39 RECORDING AND FILING 174.67

DETENTION	424.97	DWI DISTRIBUTION FUND	237.02	ROAD	169.48
DISPATCH	262.85	LAW ENFORCEMENT	201.05	TREASURERS	243.45

CK#	DATE	Name	Description	Line Item	Invoice #	DATE	PO #	Amount		
03 R128129		BANK OF AMERICA	TST*DRURY HOTELS	401-01-2110	2202023	02/20/2023	69748	17.87	17.87	1.00
15031.84			THE BULL RING	401-01-2110		/ /	69748	33.16	33.16	1.00
02/21/2023			DRURY INNS	401-01-2108		/ /	69748	251.38	251.38	1.00
			BURGER KING	401-01-2110		/ /	69748	11.91	11.91	1.00
			GARAGE DOOR TRIM 7/16X2*X7FT	401-02-2550		/ /	69811	20.36	10.18	2.00
			GARAGE DOOR SEAL	401-02-2550		/ /	69811	16.78	16.78	1.00
			GARAGE DOOR TRIM9FTX2*X7/16	401-02-2550		/ /	69811	12.94	12.94	1.00
			***HOMEDEPOT				69811			
			TRAVEL CARD ADMIN 6016							
			APPRECIATION AWARD	634-32-2225		/ /	69781	205.99	205.99	1.00
			SHIPPING	634-32-2225		/ /	69781	12.99	12.99	1.00
			***DIY				69781			
			TST*DRURY HOTELS	634-32-2110		/ /	69623	44.11	44.11	1.00
			DIONS	634-32-2110		/ /	69623	16.08	16.08	1.00
			CHEESECAKE FACTORY	634-32-2110		/ /	69623	86.45	86.45	1.00
			DRURY INNS	634-32-2108		/ /	69623	251.38	251.38	1.00
			DRURY INNS	634-32-2108		/ /	69623	251.38	251.38	1.00
			M ATWELL 4910							
			HIAXX 2.1 WILDLAND BOOTS	426-45-2999		/ /	69808	571.90	285.95	2.00
			SHIPPING	426-45-2999		/ /	69808	29.62	29.62	1.00
			FELDFIRE				69808			
			T ATWELL 1502				69808			
			HILTON SANTA FE	401-08-2110		/ /	69752	30.99	30.99	1.00
			TST*IL VICINO PIZZA	401-08-2110		/ /	69752	15.93	15.93	1.00
			WENDY'S	401-08-2110		/ /	69752	13.53	13.53	1.00
			J BAKER 7483							
			LATERAL FILE DRAWER CHERRY	635-33-2999		/ /	69759	2620.00	1310.00	2.00
			STANDARD FREIGHT	635-33-2999		/ /	69759	445.40	445.40	1.00
			LIFT GATE SERVICE	635-33-2999		/ /	69759	150.00	150.00	1.00
			*MADISON LIQUIDATORS				69759			
			DEL CHARRO	401-07-2110		/ /	69769	28.59	28.59	1.00
			CHICK-FIL-A	401-07-2110		/ /	69769	10.50	10.50	1.00
			STARBUCKS	401-07-2110		/ /	69769	11.37	11.37	1.00
			ELDORADO HOTEL	401-07-2108		/ /	69769	377.07	377.07	1.00
			ELDORADO HOTEL	401-07-2108		/ /	69769	502.76	502.76	1.00
			ELDORADO HOTEL	401-07-2110		/ /	69769	26.50	26.50	1.00
			SCHLOTZSKYS	401-07-2110		/ /	69769	18.63	18.63	1.00
			C CHAVEZ 2133							
			DRURY INNS	401-00-2108		/ /	69737	251.38	251.38	1.00
			T DAY 0265							
			EVENT*2023 LEGISLATIVE	402-50-2114		/ /	69773	300.00	300.00	1.00
			CCI*HOTEL RES	402-50-2108		/ /	69773	819.32	819.32	1.00
			ARBY'S	402-50-2108		/ /	69773	15.49	15.49	1.00
			SPORTSMANS WAREHOUSE	402-50-2232		/ /	69793	226.26	226.26	1.00
			COSF CONV CTR GARAGE	402-50-2108		/ /	69773	1.00	1.00	1.00
			HILTON SANTA FE	402-50-2108		/ /	69773	24.62	24.62	1.00
			PILOT	402-50-2108		/ /	69773	10.13	10.13	1.00
			HILTON SANTA FE	402-50-2108		/ /	69773	47.66	47.66	1.00
			10 XENO AA LITHIUM BATTERIES	402-50-2330		/ /	69806	25.39	25.39	1.00
			TAX	402-50-2330		/ /	69806	2.16	2.16	1.00
			*EBAY				69806			
			ROAD DEPARTMENT 5934							
			WALMART	401-08-2225		/ /	69770	62.91	62.91	1.00
			SHERIFF DEPARTMENT 9225							
			EVENT*2023 LEGISLATIVE	604-85-2021		/ /	69752	300.00	300.00	1.00
			HILTON SANTA FE	401-08-2108		/ /	69752	47.66	47.66	1.00

CK#	DATE	Name	Description	Line Item	Invoice #	DATE	PO #	Amount		
			SHERIFFS DEPARTMENT 5868							
			HP DESKJET 4152E	500-49-2225		/ /	69778	114.00	114.00	1.00
			HP 67XL TRI-COLOR	500-49-2225		/ /	69778	163.92	40.98	4.00
			WALMART				69778			
			CHILI'S	401-09-2110		/ /	69678	29.88	29.88	1.00
			S GUYS	401-09-2110		/ /	69678	21.69	21.69	1.00
			TST*TAOS ALE HOUSE	401-09-2110		/ /	69678	29.51	29.51	1.00
			DETENTION FACILITY 9241							
			ELDORADO HOTEL	401-09-2115		/ /	69678	251.38	251.38	1.00
			DETENTION FACILITY 7021							
			DRURY INNS	401-00-2108		/ /	69737	377.07	377.07	1.00
			H HOPKINS 4595							
			DRURY INNS	401-00-2108		/ /	69737	377.07	377.07	1.00
			J PAXON 9443							
			LONG JOHN SILVERS	401-15-2110		/ /	69737	14.82	14.82	1.00
			TST*IL VICINO PIZZA	401-15-2110		/ /	69737	20.47	20.47	1.00
			ELDORADO	401-15-2108		/ /	69737	251.38	251.38	1.00
			T PESTAK 7853				69737			
			DEL CHARRO	401-07-2110		/ /	69769	22.25	22.25	1.00
			AGAVE RESTAURANT	401-07-2110		/ /	69769	24.50	24.50	1.00
			CHICK-FIL-A	401-07-2110		/ /	69769	9.26	9.26	1.00
			STARBUCKS	401-07-2110		/ /	69769	7.14	7.14	1.00
			SCHLOTZSKYS	401-07-2110		/ /	69769	13.22	13.22	1.00
			C RODRIGUEZ 7669							
			2 IPHONE CHARGER & SAFETY GLASS	401-02-2225		/ /	69754	61.90	61.90	1.00
			WALMART				69754			
			COUNTY OF SIERRA 0395							
			NMPPA RENEWAL	401-01-2112		/ /	69751	50.00	50.00	1.00
			TST*DRURY HOTELS	401-01-2110		/ /	69748	22.09	22.09	1.00
			DRURY INNS	401-01-2108		/ /	69748	377.07	377.07	1.00
			BUFFALO WILD WINGS	401-01-2110		/ /	69748	21.40	21.40	1.00
			COUNTY OF SIERRA 1705							
			TST*MTUCCIS	401-04-2110		/ /	69728	21.70	21.70	1.00
			SANTA FE CAPITOL GRILL	401-04-2110		/ /	69728	52.54	52.54	1.00
			WENDYS	401-04-2110		/ /	69728	22.72	22.72	1.00
			TST*PLAZA CAFE	401-04-2110		/ /	69728	54.67	54.67	1.00
			DRURY INNS	401-04-2108		/ /	69728	377.07	377.07	1.00
			S TRUJILLO 6985							
			TST*DRURY HOTELS	401-01-2110		/ /	69748	18.19	18.19	1.00
			TST*DRURY HOTELS	401-01-2110		/ /	69748	15.60	15.60	1.00
			DRURY INNS	401-01-2108		/ /	69748	502.76	502.76	1.00
			A VAUGHN 1730							
			TST*MTUCCIS	401-04-2110		/ /	69728	21.70	21.70	1.00
			SANTA FE CAPITOL GRILL	401-04-2110		/ /	69728	52.55	52.55	1.00
			TST*PLAZA CAFE	401-04-2110		/ /	69728	47.91	47.91	1.00
			DRURY INNS	401-04-2108		/ /	69728	377.07	377.07	1.00
			A WHITEHEAD 3809							
			SPORTSWEAR 3555 HIGH VIS JACKET	426-45-2999		/ /	69755	399.96	199.98	2.00
			*UNIFORM AUTHORITY				69755			
			GERBER OUTERWEAR TYPHOON JACKET	426-45-2999		/ /	69757	328.10	164.05	2.00
			SHIPPING	426-45-2999		/ /	69757	4.99	4.99	1.00
			TAX	426-45-2999		/ /	69757	28.31	28.31	1.00
			*GALLS				69757			
			45 -50 GAL. TRASH BAGS	414-83-2999		/ /	69772	59.96	29.98	2.00
			COPY PAPER 20LB 92 BRITE	414-83-2999		/ /	69772	199.35	39.87	5.00
			SCOTCH BRITE SCRUB SPONGE	414-83-2999		/ /	69772	29.84	14.92	2.00
			PEN, BLACK 24CT	414-83-2999		/ /	69772	22.96	11.48	2.00
			DIAL FOAMING HAND WASH	414-83-2999		/ /	69772	37.12	9.28	4.00
			FABULOSOS CLEANER	414-83-2999		/ /	69772	31.52	7.88	4.00

CK#	DATE	Name	Description	Line Item	Invoice #	DATE	PO #	Amount		
			D RING BINDER 4PK 2"	414-83-2999		/ /	69772	66.08	16.52	4.00
			FEBREEZE 4PK SPRAY	414-83-2999		/ /	69772	39.92	9.98	4.00
			CLEAR CUTLERY COMBO PK	414-83-2999		/ /	69772	35.96	17.98	2.00
			PAPER PLATES	414-83-2999		/ /	69772	22.48	22.48	1.00
			LYSOL SPRAY 3CT	414-83-2999		/ /	69772	28.56	14.28	2.00
			PAPER TOWEL CASE	414-83-2999		/ /	69772	38.96	19.48	2.00
			ULTRA SOFT TOILET PAPER	414-83-2999		/ /	69772	68.04	22.68	3.00
			TAX	414-83-2999		/ /	69772	57.05	57.05	1.00
			*SAMS CLUB				69772			
			CREW BOSS KEVLAR BRUSH PANT	426-45-2999		/ /	69777	355.00	355.00	1.00
			SHIPPING	426-45-2999		/ /	69777	24.00	24.00	1.00
			NOMEX BRUSH PANT	426-45-2999		/ /	69777	230.00	230.00	1.00
			HOFFMAN BOOTS							
			TST*DRURY HOTELS	426-45-2110		/ /	69748	17.43	17.43	1.00
			THE SHED	426-45-2110		/ /	69748	34.00	34.00	1.00
			DRURY INNS	426-45-2108		/ /	69748	377.07	377.07	1.00
			BUFFALO WILD WINGS	426-45-2110		/ /	69748	21.40	21.40	1.00
			12 VOLT AIR COMPRESSOR	633-44-2330		/ /	69805	397.21	397.21	1.00
			APPRX. TAX ONLINE CHECKOUT	633-44-2330		/ /	69805	32.52	32.52	1.00
			HOME DEPOT				69805			
			ACCOUNT NO. 471529000518876 3							
			01/05/2023 - 02/04/2023							

ADMINISTRATION	1321.43	FACILITIES MANAGEMENT	111.98	DISPATCH	868.38
FIRE ADMINISTRATOR	2421.78	LAW ENFORCEMENT	171.02	TREASURER'S FEES	3215.40
TREASURERS	1051.79	COMMISSIONERS	1005.52	ROAD	1472.03
LAW ENFORCEMENT PROTEC	300.00	COSSAP FEDERAL GRANT	277.92	DETENTION	332.46
PROBATE JUDGE	286.67	OFFICE OF COUNTY CLERK	1027.93	LAS PALOMAS FIRE	737.80
LAS PALOMAS EMS	429.73				

==========

03 R128130	SIERRA ELECTRIC CO-OP, INC.	BROADBANDPROJECT	500-00-2091	2172023	02/17/2023	69862	6431.94	6431.94	1.00
6431.94		INVOICE NO. 2022196				69862			
02/21/2023		INVOICE DATE 12/07/2022				69862			
		ACCOUNT NO. 418							
		SIERRA COUNTY ADMINISTRATION							

COMMISSIONERS 6431.94

==========

03 R128131	WEX BANK	31.919 GALLONS OF UNLEADED	401-01-2441	2202023	02/20/2023	69222	104.60	104.60	1.00
15583.72		SIERRA COUNTY ADMINISTRATION							
02/21/2023		39.561 GALLONS OF UNLEADED	422-66-2441		/ /	69224	138.44	138.44	1.00
		SIERRA COUNTY ASSESSOR				69224			
		29.962 GALLONS OF UNLEADED	401-04-2441		/ /	69329	88.96	88.96	1.00
		SIERRA COUNTY CLERK							
		482.294 GALLONS DIESEL/UNLEADED	401-09-2441		/ /	69261	1770.79	1770.79	1.00
		SIERRA COUNTY DETENTION							
		31.585 GALLONS OF UNLEADED	500-48-2330		/ /	69279	109.05	109.05	1.00
		THE OLIVE TREE/RISE GRANT							
		55.420 GALLONS OF UNLEADED	401-02-2441		/ /	69280	191.23	191.23	1.00
		SIERRA COUNTY FACILITIES MGMT							
		25.694 GALLONS OF SUPREME	409-77-2441		/ /	69229	105.32	105.32	1.00
		ARREY DERRY FIRE DEPT							
		32.347 GALLONS OF DIESEL	411-78-2441		/ /	69231	152.00	152.00	1.00
		MONTICELLO FIRE DEPT							
		25.811 GALLONS OF DIESEL	413-80-2441		/ /	69230	121.03	121.03	1.00
		CABALLO FIRE DEPT							
		19.038 GALLONS OF DIESEL	414-83-2441		/ /	69232	89.46	89.46	1.00
		LAS PALOMAS FIRE DEPT							
		98.209 GALLONS OF UNLEADED	426-45-2441		/ /	69228	342.18	342.18	1.00

CK#	DATE	Name	Description	Line Item	Invoice #	DATE	PO #	Amount		
			EMERGENCY SERVICES ADMINISTRATOR							
			28.162 GALLONS OF UNLEADED	629-03-2441		/ /	69495	97.46	97.46	1.00
			EMERGENCY COORDINATOR							
			1479.852 GALLONS DIESEL/UNLEADED	402-50-2441		/ /	69292	6498.59	6498.59	1.00
			SIERRA COUNTY ROAD DEPT							
			165.293 GALLONS DIESEL/UNLEADED	405-67-2441		/ /	69270	641.92	641.92	1.00
			SIERRA COUNTY LANDFILL							
			26.959 GALLONS OF UNLEADED	634-32-2441		/ /	69225	90.73	90.73	1.00
			SIERRA COUNTY REGIONAL DISPATCH				69225			
			1401.394 GALLONS OF UNLEADED	401-08-2441		/ /	69223	4912.58	4912.58	1.00
			SIERRA COUNTY SHERIFF'S DEPT				69223			
			37.085 GALLONS OF UNLEADED	401-07-2441		/ /	69281	129.38	129.38	1.00
			SIERRA COUNTY TREASURER							
			INVOICE NO. 87010467							
			INVOICE DATE 01/31/2023							
			ACCOUNT NO. 0496-00-332808-5							

ADMINISTRATION	104.60	REAPPRAISAL FUND	138.44	OFFICE OF COUNTY CLERK	88.96
DETENTION	1770.79	RISE GRANT	109.05	FACILITIES MANAGEMENT	191.23
ARREY/DERRY FIRE	105.32	MONTICELLO FIRE	152.00	CABALLO FIRE	121.03
LAS PALOMAS FIRE	89.46	FIRE ADMINISTRATOR	342.18	EMERGENCY MGMT SERVICE	97.46
ROAD	6498.59	LANDFILL	641.92	DISPATCH	90.73
LAW ENFORCEMENT	4912.58	TREASURERS	129.38		

03 0128132	APP OF NEW MEXICO ED. PLLC	LAB/X RAY FOR	406-70-2873	2222023 02/22/2023		115.82	115.82	1.00
115.82		DENVER CARPENTER						
02/28/2023		DOS 11/26/2022						
		APPROVED BY COMMISSION						
		ON 02/21/2023						

COUNTY INDIGENT CLAIMS 115.82

03 0128133	AT&T	LAS PALOMAS FIRE DEPT	414-83-2221	2242023 02/24/2023		46.04	46.04	1.00
46.04		ACCOUNT NO. 050 543-7831 001						
02/28/2023		BILL DATE 02/12/2023						

LAS PALOMAS FIRE 46.04

03 0128134	BOHANNAN HUSTON	GRT	500-50-2745	2282023 02/28/2023	69707	1013.07	1013.07	1.00
1013.07		SIERRA COUNTY ROAD DEPT						
02/28/2023		INVOICE NO. 000122833						
		INVOICE DATE 02/03/2023						
		PROJECT:20230425						
		JANUARY 2023						

ROAD 1013.07

03 0128135	BRETT HENRY	AIR CYLINDERS-COMPOSITS	409-77-2330	2232023 02/23/2023	69695	1400.00	50.00	28.00
4921.37		MILEAGE	409-77-2330	/ /	69695	85.80	.60	143.00
02/28/2023		TRAVEL HOUR	409-77-2330	/ /	69695	120.00	50.00	2.40
		GRT	409-77-2330	/ /	69695	124.45	124.45	1.00
		ARREY DERRY FIRE DEPT						
		INVOICE NO. 1059						
		AIR CYLINDERS-COMPOSITE	410-74-2330	/ /	69699	1800.00	50.00	36.00
		MILEAGE	410-74-2330	/ /	69699	85.80	.60	143.00
		TRAVEL HOURS	410-74-2330	/ /	69699	120.00	50.00	2.40
		GRT	410-74-2330	/ /	69699	155.45	155.45	1.00
		WINSTON FIRE DEPT						
		INVOICE NO. 1060						

CK#	DATE	Name	Description	Line Item	Invoice #	DATE	PO #	Amount		
			AIR CYLINDERS-COMPOSITE	411-78-2330		/ /	69698	750.00	50.00	15.00
			MILEAGE	411-78-2330		/ /	69698	85.80	.60	143.00
			TRAVEL HOURS	411-78-2330		/ /	69698	120.00	50.00	2.40
			GRT	411-78-2330		/ /	69698	74.07	74.07	1.00
			MONTICELLO FIRE DEPT							
			INVOICE NO. 1058							

ARREY/DERRY FIRE 1730.25 WINSTON 2161.25 MONTICELLO FIRE 1029.87

03 0128136		BRIAN FALCON	JANITORIAL SERVICES	401-02-2106	2212023	02/21/2023	69384	1584.00	1584.00	1.00
1584.00			SIERRA COUNTY ADMINISTRATION							
02/28/2023			FEBRUARY 2023 CLEANING							
			INVOICE #FEBRUARY 2023 CLEANING							
			INVOICE DATE 02/20/2023							

FACILITIES MANAGEMENT 1584.00

03 0128137		CENTURYLINK	ARREY DERRY FIRE DEPT	409-77-2221	2242023	02/24/2023		187.98	187.98	1.00
187.98			ACCOUNT NO. 575-267-0716 746B							
02/28/2023			BILL DATE 02/07/2023							

ARREY/DERRY FIRE 187.98

03 0128138		CHETAN SHIVARAM DDS PC	DENTAL BILLING FOR INMATES	406-70-2873	2222023	02/22/2023		615.82	615.82	1.00
615.82			DOS 11/05/2022,01/04/2023,							
02/28/2023			12/10/2022							
			APPROVED BY COMMISSION							
			ON 02/21/2023							

COUNTY INDIGENT CLAIMS 615.82

03 0128139		CITY OF TRUTH OR CONSEQUENCES	SIERRA COUNTY ADMINISTRATION	401-02-2552	2102023	02/10/2023		782.56	782.56	1.00
5435.21			ACCOUNT NO. 1001-00199-01							
02/28/2023			1712 N DATE ST							
			12/30/2022 TO 02/06/2023							
			SIERRA COUNTY ADMINISTRATION	401-02-2552	2212023	02/21/2023		1186.96	1186.96	1.00
			ACCOUNT NO. 1001-00199-01							
			1712 N DATE ST							
			12/30/2022 TO 02/06/2023							
			SIERRA COUNTY COURTHOUSE	401-02-2552		/ /		17.83	17.83	1.00
			300 N DATE ST							
			ACCOUNT NO. 2008-09672-00							
			SERVICE 12/29/2022 - 01/28/2023							
			PUBLIC HEALTH OFFICE	401-02-2552		/ /		476.72	476.72	1.00
			201 E FOURTH AVE							
			ACCOUNT NO. 2008-09799-00							
			SERVICE 12/29/2022 - 01/28/2023							
			SIERRA COUNTY DETENTION	401-02-2552		/ /		177.47	177.47	1.00
			300 N DATE ST							
			ACCOUNT NO. 2008-09807-00							
			SERVICE 12/29/2022 - 01/28/2023							
			SIERRA COUNTY COURTHOUSE	401-02-2552		/ /		303.83	303.83	1.00
			300 N DATE ST							
			ACCOUNT NO. 2008-12848-00							
			SERVICE 12/29/2022 - 01/28/2023							
			SIERRA COUNTY FAIR BLDG	401-02-2552		/ /		238.79	238.79	1.00
			100 HYDE ST							
			ACCOUNT NO. 3013-09675-00							
			SERVICE 01/15/2023 - 02/14/2023							

CK#	DATE	Name	Description	Line Item	Invoice #	DATE	PO #	Amount		
			SIERRA COUNTY FAIR BLDG 100 HYDE ST ACCOUNT NO. 3013-09676-00 SERVICE 01/15/2023 - 02/14/2023	401-02-2552		/ /		24.07	24.07	1.00
			SIERRA COUNTY FAIR BLDG 100 HYDE ST ACCOUNT NO. 3013-12860-00 SERVICE 01/15/2023 - 02/14/2023	401-02-2552		/ /		58.11	58.11	1.00
			SIERRA COUNTY FAIR BLDG 100 HYDE ST ACCOUNT NO. 3013-12861-00 SERVICE 01/15/2023 - 02/14/2023	401-02-2552		/ /		91.44	91.44	1.00
			SIERRA COUNTY FAIR YARD 100 HYDE ST ACCOUNT NO. 3013-12862-00 SERVICE 01/15/2023 - 02/14/2023	401-02-2552		/ /		135.19	135.19	1.00
			SIERRA COUNTY FAIR BLDG 100 HYDE ST ACCOUNT NO. 3013-12863-00 SERVICE 01/15/2023 - 02/14/2023	401-02-2552		/ /		16.96	16.96	1.00
			SIERRA COUNTY FAIR BLDG 100 HYDE ST ACCOUNT NO. 3013-12880-00 SERVICE 01/15/2023 - 02/14/2023	401-02-2552		/ /		758.02	758.02	1.00
			SIERRA COUNTY COMPLEX 2501 S BROADWAY ST ACCOUNT NO. 3013-25113-00 SERVICE 01/15/2023 - 02/14/2023	401-02-2552		/ /		708.35	708.35	1.00
			SIERRA COUNTY ADMINISTRATION 855 VAN PATTEN AVE ACCOUNT NO. 3131-19890-00 SERVICE 01/12/2023 - 02/11/2023	401-02-2552		/ /		458.91	458.91	1.00
FACILITIES MANAGEMENT 5435.21										
03 0128140 867.51 02/28/2023		CITY OF TRUTH OR CONSEQUENCES	SIERRA COUNTY LANDFILL ACCOUNT NO. 5999-21777-00 BILL DATE 02/15/2023 SERVICE 12/31/2022 - 01/31/2023	405-67-2080	2212023A	02/21/2023		867.51	867.51	1.00
LANDFILL 867.51										
03 0128141 839.00 02/28/2023		COUNTY OF SOCORRO	INMATES SERVICES DOS 01/06/2023 APPROVED BY COMMISSION ON 02/21/2023	406-70-2873	2222023	02/22/2023		839.00	839.00	1.00
COUNTY INDIGENT CLAIMS 839.00										
03 0128142 6500.00 02/28/2023		JANET PORTER CARREJO	CONSULTING FEBRUARY 2023	627-26-2771	2282023	02/28/2023	69600 69600	6500.00	6500.00	1.00
FLOOD DAMAGE REPAIR 6500.00										
03 0128143 1200.00 02/28/2023		KIRIKOS FAMILY FUNERAL HOME INC	CREMATION SERVICE FOR DEBORAH SOAPE B2023-002	406-70-2668	2222023	02/22/2023		600.00	600.00	1.00
			CREMATION SERVICE FOR SANDRA WILLIAMS B2023-003	406-70-2668		/ /		600.00	600.00	1.00

CK#	DATE	Name	Description	Line Item	Invoice #	DATE	PO #	Amount		
			APPROVED BY COUNTY MANAGER ON 01/23/2023							
COUNTY INDIGENT CLAIMS 1200.00										
03 0128144 4835.79 02/28/2023		LUNA COUNTY DETENTION CENTER	INMATES SERVICES DOS 01/03/2023,08/03/2022, 07/27/2022 APPROVED BY COMMISSION ON 02/21/2023	406-70-2873	2222023	02/22/2023		4835.79	4835.79	1.00
COUNTY INDIGENT CLAIMS 4835.79										
03 0128145 80.77 02/28/2023		MESILLA VALLEY TYRE	DISMOUNT/MOUNT SIERRA COUNTY ROAD DEPT INVOICE NO. 16540 INVOICE DATE 02/15/2023	402-50-2443	2212023	02/21/2023	69855 69855	80.77	80.77	1.00
ROAD 80.77										
03 0128146 10225.91 02/28/2023		MICHAEL KOZLOSKI	HP COLOR LASER JET PRO	627-26-2333	2222023	02/22/2023	69739	820.00	820.00	1.00
			TRIP CHARGE	627-26-2109		/ /	69739	190.00	190.00	1.00
			GRT	627-26-2333		/ /	69739	15.91	15.91	1.00
			SIERRA COUNTY FLOOD INVOICE DATE 02/13/2023							
			8 24" MONITORS P SERIES DELL	422-66-2999		/ /	69829	1600.00	200.00	8.00
			4 DELL OPTIPLEX 7000 COMPUTERS	422-66-2999		/ /	69829	7600.00	1900.00	4.00
			SIERRA COUNTY ASSESSOR INVOICE DATE 02/21/2023							
FLOOD DAMAGE REPAIR 1025.91 REAPPRAISAL FUND 9200.00										
03 0128147 493.26 02/28/2023		MIMBRES MEMORIAL HOSPITAL	SERVICES FOR INMATES DOS 11/26/2022,07/28/2022, 08/17/2022 APPROVED BY COMMISSION ON 02/21/2023	406-70-2873	2222023	02/22/2023		493.26	493.26	1.00
COUNTY INDIGENT CLAIMS 493.26										
03 0128148 260.87 02/28/2023		MYERS, JUSTIN W.	TACTICAL BOOTS SIERRA COUNTY SHERIFF'S DEPT LALO	401-08-2116	2232023	02/23/2023	69523	260.87	260.87	1.00
LAW ENFORCEMENT 260.87										
03 0128149 2371.04 02/28/2023		NEW MEXICO GAS COMPANY	SIERRA COUNTY COMPLEX 2501 S BROADWAY ST ACCOUNT NO. 044213314-0477240-6 BILL DATE 02/13/2023	401-02-2552	2212023	02/21/2023		1086.78	1086.78	1.00
			SIERRA COUNTY ADMINISTRATION 857 VAN PATTEN AVE ACCOUNT NO. 044213314-1156524-2 BILL DATE 02/15/2023	401-02-2552		/ /		273.60	273.60	1.00
			SIERRA COUNTY FAIR BARN 1321 HYDE AVE ACCOUNT NO. 044272212-0477376-6 BILL DATE 02/10/2023	401-02-2552		/ /		28.51	28.51	1.00
			ALBERT LYON CENTER	401-02-2552		/ /		401.03	401.03	1.00

CK#	DATE	Name	Description	Line Item	Invoice #	DATE	PO #	Amount		
			2953 S BROADWAY ACCOUNT NO. 044272212-1345021-3 SIERRA COUNTY ADMINISTRATION 1712 N DATE ST ACCOUNT NO. 044213314-0480033-1 BILL DATE 02/20/2023	401-02-2552	2272023	02/27/2023		581.12	581.12	1.00
FACILITIES MANAGEMENT 2371.04										
03 0128150 75.66 02/28/2023		O'REILLY AUTOMOTIVE STORES, INC	OIL FILTER INVOICE NO. 2162-107483 INVOICE DATE 02/22/2023 SIERRA COUNTY ROAD DEPT	402-50-2330	2232023	02/23/2023	69731	75.66	75.66	1.00
ROAD 75.66										
03 0128151 237.40 02/28/2023		QUILL CORPORATION	RECEIPT BOOKS FOR ATS RECEIPT BOOKS FOR HTS SIERRA COUNTY LANDFILL INVOICE NO. 30626838 INVOICE DATE 02/06/2023 ACCOUNT NO. 2693114	405-67-2225 405-67-2225	2242023	02/24/2023 / /	69795 69795	118.70 118.70	23.74 23.74	5.00 5.00
LANDFILL 237.40										
03 0128152 75.00 02/28/2023		REED'S TIRE	USED TIRE SIERRA COUNTY ROAD DEPT INVOICE NO. 12556 INVOICE DATE 02/23/2023	402-50-2330	2232023	02/23/2023	69315	75.00	75.00	1.00
ROAD 75.00										
03 0128153 50757.55 02/28/2023		SIERRA ELECTRIC CO-OP, INC.	BROADBAND PROJECT INVOICE NO. 2023001 INVOICE DATE 01/11/2023 BROADBAND PROJECT INVOICE NO. 2023002 INVOICE DATE 01/11/2023 ACCOUNT NO. 418	500-00-2091 500-00-2091	2272023 / /	02/27/2023	69885 69885 69885 69885 69885	22256.07 28501.48	22256.07 28501.48	1.00 1.00
COMMISSIONERS 50757.55										
03 0128154 75.96 02/28/2023		SUN VALLEY, INCORPORATED	KEYS SIERRA COUNTY FACILITIES MGMT INVOICE NO. 168044/6 INVOICE DATE 02/17/2023 CUSTOMER NO. 3082	401-02-2550	2212023	02/21/2023	69286	6.36	6.36	1.00
			KEY SIERRA COUNTY FACILTIES MGMT INVOICE NO. 168098/6 INVOICE DATE 02/22/2023 CUSTOMER NO. 3082	401-02-2550	2222023	02/22/2023	69286	1.59	1.59	1.00
			FLAP DISC SIERRA COUNTY FACILITIES MGMT INVOICE NO. 168182/6 INVOICE DATE 02/27/2023 CUSTOMER NO. 3082	401-02-2550	2272023	02/27/2023	69286	68.01	68.01	1.00
FACILITIES MANAGEMENT 75.96										

CK#	DATE	Name	Description	Line Item	Invoice #	DATE	PO #	Amount		
03 0128155		TALON SEPTIC AND POTTY SERVICE	PORTABLE POTTY SERVICES	401-08-2887	2272023	02/27/2023	69505	150.00	150.00	1.00
150.00			SIERRA COUNTY SHERIFF'S DEPT							
02/28/2023			FEBRUARY 2023							
			INVOICE NO. L380							
			INVOICE DATE 02/28/2023							
			CUSTOMER ID C295							
LAW ENFORCEMENT		150.00								
03 0128156		TRICORE REFERENCE LABORATORIES	SERVICE FOR WHITLEY FERGUSON	406-70-2873	2222023	02/22/2023		145.82	145.82	1.00
145.82			DOS 09/07/2022							
02/28/2023			APPROVED BY COMMISSION							
			ON 02/21/2023							
COUNTY INDIGENT CLAIMS		145.82								
03 0128157		VERIZON WIRELESS SERVICES	SIERRA COUNTY CLERK	401-04-2221	2222023	02/22/2023	69330	140.78	140.78	1.00
362.92			INVOICE NO. 9927301604							
02/28/2023			ACCOUNT NO. 870073442-00001							
			BILL DATE 02/09/2023							
			SIERRA COUNTY ADMINISTRATION	401-01-2221	2272023	02/27/2023	69254	181.20	181.20	1.00
			COUNTY MANAGER & PROCUREMENT							
			INVOICE NO. 9927481724							
			ACCOUNT NO. 942019852-00003							
			BILL DATE 02/10/2023							
			COSSAP GRANT	500-49-2221		/ /	69747	40.94	40.94	1.00
			INVOICE NO. 9927481723				69747			
			ACCOUNT NO. 942019852-00001							
			BILL DATE 02/10/2023							
OFFICE OF COUNTY CLERK		140.78	ADMINISTRATION	181.20	COSSAP FEDERAL GRANT		40.94			
03 0128158		WEST TEXAS MAX SURG,PA	SERVICES FOR INMATES	406-70-2873	2222023	02/22/2023		134.92	134.92	1.00
134.92			DOS 07/25/2022, 11/08/2022							
02/28/2023			APPROVED BY COMMISSION							
			ON 02/21/2023							
COUNTY INDIGENT CLAIMS		134.92								
03 0128159		WINDSTREAM	SIERRA COUNTY REGIONAL DISPATCH	634-32-2221	2222023	02/22/2023		834.97	834.97	1.00
1656.88			ACCOUNT NO. 100290582							
02/28/2023			575-894-7111							
			INVOICE DATE 02/07/2023							
			SIERRA COUNTY DETENTION	401-09-2221	2282023	02/28/2023		635.62	635.62	1.00
			ACCOUNT NO. 100287780							
			575-894-2537							
			INVOICE DATE 02/22/2023							
			SIERRA COUNTY SHERIFF'S DEPT	401-08-2221		/ /		186.29	186.29	1.00
			ACCOUNT NO. 100291694							
			575-894-9150							
			INVOICE DATE 02/20/2023							
DISPATCH		834.97	DETENTION	635.62	LAW ENFORCEMENT		186.29			
03 0128160		WORKQUEST	ADMIN SHREDDING	401-01-2898	2222023	02/22/2023	69477	44.41	44.41	1.00
101.55			ASSESSOR SHREDDING	401-06-2898		/ /	69477	28.57	28.57	1.00
02/28/2023			CLERK SHREDDING	401-05-2111		/ /	69477	28.57	28.57	1.00
			SIERRA COUNTY ADMINISTRATION							

CK#	DATE	Name	Description	Line Item	Invoice #	DATE	PO #	Amount
			INVOICE NO. SINV034389 INVOICE DATE 02/14/2023 CUSTOMER NO. S0688431					

ADMINISTRATION 44.41 PROPERTY ASSESSMENTS 28.57 BUREAU OF ELECTIONS 28.57

331 1154542.81 / / TOTAL

Date: 3/15/23 9:05:13 (CHEC61)

C E R T I F I C A T I O N

TOTAL WARRANTS PRINTED 331

THE UNDERSIGNED MEMBERS OF THE SIERRA COUNTY BOARD OF COMMISSIONERS DO CERTIFY THAT THE CLAIMS ENUMERATED ABOVE WERE APPROVED AND ALLOWED & DO AUTHORIZE THE WARRANTS AGAINST THE FUNDS OF SIERRA COUNTY FOR THE SUM OF 1,184,842.81 ON ACCOUNT OF OBLIGATIONS INCURRED FOR THE SERVICES AS SHOWN ABOVE FOR THE PERIOD ENDING 03/21/2023 . WE CERTIFY THAT THE WITHIN NAMED PERSONS ARE LEGALLY ENTITLED UNDER THE CONSTITUTION OF THE STATUTES OF NEW MEXICO TO RECEIVE THE COMPENSATION STATED HEREIN. THAT THE SERVICES HAVE BEEN PERFORMED AS STATED IN THE ACCOUNTS HEREIN, THAT THEY ARE NECESSARY AND PROPER, THAT THIS VOUCHER HAS BEEN EXAMINED. THAT THE AMOUNTS CLAMIED ARE JUST, REASONABLE, AND AS AGREED AND THAT NO PART HAS BEEN PAID BY SIERRA COUNTY.

SIGNED

ATTEST BY

TRAVIS DAY, COMMISSIONER	HANK HOPKINS, COMMISSIONER	JAMES PAXON, COMMISSIONER	SHELLY TRUJILLO, COUNTY CLERK

State of New Mexico

Shelly K. Trujillo
County Clerk
575-894-2840

Candace Chavez
County Treasurer
575-894-3524

Michael Huston
County Assessor
575-894-2589

Tom Pestak
Probate Judge
575-740-4900

SIERRA COUNTY
NEW MEXICO

1712 N. Date, Suite D
Truth or Consequences, New Mexico 87901

Amber Vaughn, County Manager
575-894-6215 voice 575-894-9548 fax

County of Sierra

James Paxon
Commissioner
575-894-6215

Hank Hopkins
Commissioner
575-894-6215

Travis Day
Commissioner
575-894-6215

Joshua Baker
County Sheriff
575-894-9150

Resolution No. 110-149

A Budget/Line Item Adjustment Resolution Increase Revenue and Expenses in Funds 512, 500, 624, 419, 401, 629, 413, 411, 407, 414, 425, 410, and 409.

Whereas, the Board of Sierra County Commissioners, meeting in regular public session March 21, 2023, deem it necessary to increase/decrease in the said line items in the budget;

Whereas, money received from Department of Treasury for Local Assistance & Tribal Consistency Fund, money received from Department of Treasury for second tranche of ARPA funding, money not budgeted for FY2022-2023, FY2022 paid in FY2023 and bring line items out of the negative;

Thefore Be It Resolved, that the Sierra County Board of Commissioners hereby move to Implement the line item adjustments in the FY 2022-2023 Operating Budget as described below:

Increase Revenue

512-0-1171	LATCF	$ 3,450,600.00
500-0-1090	Grant Project-ARPA Funding	$ 1,048,012.50

Increase Expense

500-00-2091	Grant Projects-ARPA Funding	$ 1,048,012.50
624-87-2900	Clerk Recording Fee-Capital Outlay	$ 27,093.51
624-87-2999	Clerk Recording Fee-Capital under $5000	$ 110,310.09
419-13-2778	Community Projects-Sierra Joint Office on Aging	$ 13,000.00
401-09-2441	Detention-Fuel	$ 2,307.28
629-03-2002	Emergency Management Services-FullTime Salaries	$ 39,897.00
629-03-2006	Emergency Management Services-PERA Match	$ 10,037.00
629-03-2007	Emergency Management Services-FICA Match	$ 5,589.00
629-03-2662	Emergency Management Services-Retiree Insurance	$ 1,149.00
413-80-2900	Caballo Fire Dept-Capital Outlay	$ 176,000.00
413-80-2999	Caballo Fire Dept-Capital Under	$ 7,000.00
411-78-2900	Monticello Fire Dept-Capital Outlay	$ 64,000.00
411-78-2999	Monticello Fire Dept-Capital Under	$ 80,000.00
407-75-2900	Hillsboro Fire Dept-Capital Outlay	$ 150,000.00
407-75-2999	Hillsboro Fire Dept-Capital Under	$ 50,000.00
414-83-2900	Las Palomas Fire Dept-Capital Outlay	$ 50,000.00

414-83-2999	Las Palomas Fire Dept-Capital Under	$ 50,000.00
425-59-2900	Poverty Creek Fire Dept-Capital Outlay	$ 29,000.00
425-59-2999	Poverty Creek Fire Dept-Capital Under	$ 60,000.00
410-74-2900	Winston Fire Dept-Capital Outlay	$ 50,000.00
410-74-2999	Winston Fire Dept-Capital Under	$ 50,000.00
409-77-2900	Arrey Derry Fire Dept-Capital Outlay	$ 19,000.00
409-77-2999	Arrey Derry Fire Dept-Capital Under	$ 30,000.00

Passed, Approved and Adopted this 21st day of March 2023.

Board of County Commissioners
Sierra County, New Mexico

Attest:

Travis Day, Chairman

James Paxon, Vice-Chairman

Shelly K. Trujillo, County Clerk

Hank Hopkins, Member

State of New Mexico

Shelly K. Trujillo
County Clerk
575-894-2840

Candace Chavez
County Treasurer
575-894-3524

Michael Huston
County Assessor
575-894-2589

Tom Pestak
Probate Judge
575-740-4900

SIERRA COUNTY
NEW MEXICO

1712 N. Date Street, Suite D
Truth or Consequences, New Mexico 87901

Charlene Webb, County Manager
575-894-6215 voice 575-894-9548 fax

County of Sierra

James Paxon
Commissioner
575-894-6215

Hank Hopkins
Commissioner
575-894-6215

Travis Day
Commissioner
575-894-6215

Glenn Hamilton
County Sheriff
575-894-9150

Resolution No. 110-151

Budget Transfer from Fund 401 to Fund 629.

Whereas, the Board of Sierra County Commissioners, meeting in regular public session March 21, 2023, deem it necessary to transfer in the said line items in the budget to be made;

Whereas, to increase expense line items;

Therefore Be It Resolved, that the Sierra County Board of Commissioners hereby move to Implement the line item adjustments in the FY 2022-2023 Operating Budget as described below:

Transfer From

401-0-1971	General Fund	$ 53,000.00

Transfer To

629-0-1970	Emergency Mgmt. Services	$ 53,000.00

Passed, Approved and Adopted this 21st day of March 2023.

Board of County Commissioners
Sierra County, New Mexico

Attest:

Travis Day, Chairman

James Paxon, Vice-Chairman

Shelly K. Trujillo, County Clerk

Hank Hopkins, Member

State of New Mexico

Shelly Trujillo
County Clerk
575-894-2840

Candace Chavez
County Treasurer
575-894-3524

Michael Huston
County Assessor
575-894-2589

Tom Pestak
Probate Judge
575-894-2840

SIERRA COUNTY
NEW MEXICO

1712 Date
Truth or Consequences, New Mexico 87901

Amber Vaughn County Manager
575-894-6215 voice 575-894-9548 fax

County of Sierra

Travis Day
Vice Chair
575-894-6215

William Hopkins
Commissioner
575-894-6215

James Paxon
Chairman
575-894-6215

Glenn Hamilton
County Sheriff
575-894-9150

BOARD OF COUNTY COMMISSIONERS
SIERRA COUNTY, NEW NEXICO

Resolution No. 110-150

Indigent Claims

WHEREAS, the Board of Sierra County Commissioners has received Indigent Hospital and Medical Claim request for those persons unable to make proper restitution for Medical Services in the amount of 2781.75 new claims, and;

WHEREAS, the Sierra County Board of Commissioners desire to provide for the equitable and reasonable payment of claims, and;

THEREFORE BE IT RESOLVED, that the Sierra County Board of Commissioners hereby approve payment to those Indigent Hospital Claims in the amount of:

Sole community Providers in the amount of $ 2781.75

to be deducted from the proper funds appropriated in the 2022-2023PY Budget. March 21, 2023

Board of County Commissioners
Sierra County, NM

JAMES PAXON, CHAIRMAN

TRAVIS DAY, VICE-CHAIRMAN

Attest:

SHELLY K. TRUJILLO
SIERRA COUNTY CLERK

WILLIAM HOPKINS, COMMISSIONER

SIERRA COUNTY INDIGENT HEALTH CARE
RESOLUTION NO.__110-150

CLAIMS APPROVED FOR $ 2781.75

VENDOR# 1200 COUNTY OF SOCORRO	1	$ 843.00
VENDOR# 5653 SUN CITY ORTHOPAEDICS	3	$ 899.55
VENDOR# 2853 MIMBRES MEMORIAL HOSPITAL	4	$ 1039.20

Total $ 2781.75

©IHS
Issued 03/08/23

Source Totals Report

County Of Sierra
Batch Dates 03/21/2023 through 03/21/2023
For Vendor: All Vendors

Source	Description	Amount Billed	Amount Paid
01	Jail - Physician Services	9,973.00	899.55
02	Jail - In House Inmate Service	843.00	843.00
04	Jail - Hospital Out-Patient	6,977.19	1,039.20
	Expenditures	17,793.19	2,781.75
	Reimb/Adjustments		
	Grand Total	**17,793.19**	**2,781.75**

Source Totals Report Detail

Invoice #	Source	DOS	Amount Billed	Amount Paid
16096*5653*3	01	01/23/2023	1,266.00	96.31
16096*5653*4	01	01/30/2023	7,819.00	725.88
16096*5653*2	01	02/13/2023	49.00	0.00
16096*5653*2	01	02/13/2023	839.00	77.36
3 invoices, 4 line items			**9,973.00**	**899.55**
INMATE*1200*8	02	02/06/2023	843.00	843.00
1 invoices, 1 line items			**843.00**	**843.00**
15821*2853*7	04	07/28/2022	10.00	5.67
15057*2853*2	04	11/26/2022	49.00	0.00
15057*2853*2	04	11/26/2022	839.00	274.14
15821*2853*6	04	07/22/2022	10.00	5.67
15821*2853*6	04	07/22/2022	19.00	7.75
15711*2853*1	04	10/13/2022	885.81	164.68
15711*2853*1	04	10/13/2022	4,266.15	338.23
15711*2853*1	04	10/13/2022	898.23	243.06
4 invoices, 8 line items			**6,977.19**	**1,039.20**
Grand Totals			**17,793.19**	**2,781.75**

8 invoices listed.
13 line items listed.

State of New Mexico

Shelly Trujillo
County Clerk
575-894-2840

Candace Chavez
County Treasurer
575-894-3524

Michael Huston
County Assessor
575-894-2589

Tom Pestak
Probate Judge
575-894-2840

SIERRA COUNTY
NEW MEXICO

1712 Date St.
Truth or Consequences, New Mexico 87901

Amber Vaughn, County Manager
575-894-6215 voice 575-894-9548 fax

County of Sierra

Travis Day
Vice Chair
575-894-6215

Hank Hopkins
Commissioner
575-894-6215

James Paxon
Chairman
575-894-6215

Glenn Hamilton
County Sheriff
575-894-9150

March 6, 2023

Amber Vaughn
1712 Date St.
Truth or Consequences, NM 87901

RE: Cremation Approval-John Darling B2023-004

Dear Ms. Vaughn:

Mr. Darling died 12/26/222 No one has come forward to claim the body. He has had a vehicle but it has an expired registration. No next of kin has been found. I recommend that the County assume the financial responsibility for the cremation.

Thank you for your attention in this matter, and if you should have any questions or comments, please let me know.

Thank You,

Larita Engle

Larita Engle
IHC Clerk

_____ County Manager-Amber Vaughn

Approved on 7 day of March year 2023

State of New Mexico

Shelly Trujillo
County Clerk
575-894-2840

Candace Chavez
County Treasurer
575-894-3524

Michael Huston
County Assessor
575-894-2589

Tom Pestak
Probate Judge
575-894-2840

SIERRA COUNTY
NEW MEXICO

1712 Date St.
Truth or Consequences, New Mexico 87901

Amber Vaughn, County Manager
575-894-6215 voice 575-894-9548 fax

County of Sierra

Travis Day
Vice Chair
575-894-6215

Hank Hopkins
Commissioner
575-894-6215

James Paxon
Chairman
575-894-6215

Glenn Hamilton
County Sheriff
575-894-9150

March 6, 2023

Amber Vaughn
1712 Date St.
Truth or Consequences, NM 87901

RE: Cremation Approval-John Darling B2023-004

Dear Ms. Vaughn:

Mr. Darling died 12/26/222 No one has come forward to claim the body. He has had a vehicle but it has an expired registration. No next of kin has been found. I recommend that the County assume the financial responsibility for the cremation.

Thank you for your attention in this matter, and if you should have any questions or comments, please let me know.

Thank You,

Larita Engle

Larita Engle
IHC Clerk

_____ County Manager-Amber Vaughn

Approved on _____ day of _____ year_____

KIRIKOS
FAMILY FUNERAL HOME, INC.
SIERRA CREMATORY, LLC

February 17, 2023

Amber Vaughn, Sierra County Manager
County of Sierra
1712 N. Date Street, Suite D
Truth or Consequences, NM 87901

RE: Indigent Claim For: John Darling
Date of Death: December 26, 2022

Dear Ms. Vaughn:

We are requesting your signature on the attached Authorization for Cremation form and Release Affidavit so we can proceed with obtaining a Cremation Permit from the Office of the Medical Investigator for the cremation of John Darling. Mr. Darling died at 712 Juniper Street, Truth or Consequences, NM 87901 on December 26, 2022. The NM Office of the Medical Investigator has not been able to locate next of kin who are able to take financial responsibility, and their office has requested the county take responsibility for her cremation. We have attached an Application for Indigent Burial for approval. The Office of the Medical Examiner issues the Cremation Permit to us free of charge for Indigent Cases as long as we send them documentation from your office that the case has been approved.

We will appreciate all your efforts and thank you for your consideration and help with regard to the County of Sierra's approval for this Indigent Burial Claim.

Sincerely,

Rebecca S. Gentry
KIRIKOS FAMILY FUNERAL HOME, INC.

Enclosure

303 N. Cedar St.
P.O. Box 112
Truth or Consequences, NM 87901
Telephone
(575) 894-2574
Facsimile
(575) 894-6815
Email
kirikos@kirikosffh.com

SIERRA CREMATORY, LLC.
P. O. Box 112 - 303 Cedar Street
Truth or Consequences, NM 87901
TELEPHONE - 575/894-2574
FAX 575/894-6815

AUTHORIZATION FOR CREMATION

Date of Death: DECEMBER 26, 2022

Crematory ID # _____

The undersigned hereby authorizes SIERRA CREMATORY, LLC. to cremate the remains of:

JOHN	DARLING	DECEMBER 26, 2022
First Name **Middle**	**Last**	**Date of Death**

That he/she has the legal right to authorize and direct the cremation, interment and/or disposition of said remains and agrees to hold the above Crematory and *Kirikos Family Funeral Home, Inc.*, its officers, agents and employees harmless from any and all loss, costs, or damages it or they may suffer or incur by reason of acting upon the order and authorization set forth.

That the remains delivered to the crematory are those only of the deceased named herein.

That the body will be delivered in a suitable, rigid container.

That the Office of the Medical Investigator's signed Cremation Permit will accompany the body.

That the deceased has not had a pacemaker implanted or radiation-producing implant device or any other life-sustaining device that could be explosive. Or, if such a device exists, he/she agrees to have the Funeral Director or others remove it before cremation. He/she also understands that in the event of failure to notify the Funeral Director or others responsible for the removal of such device, he/she will be liable for any damages to the Crematory or injury to crematory personnel.

That ALL non-combustible materials delivered with the body will NOT be returned with the cremated remains, but will become the property of, and be disposed of by the crematory.

I understand that if it is the intention to save ANY items it is my responsibility to remove them before cremation.

The undersigned understands the cremated remains (hereafter referred to as the cremains) are bone fragments which will be pulverized to permit their placement in an urn or other container. In the event the capacity of the urn other container is insufficient to accommodate all of the cremains, the Crematory is hereby authorized to make disposition of the remaining cremains at its discretion, unless otherwise instructed in writing by the undersigned.

That all charges are to be paid before cremation can occur.

That the SIERRA CREMATORY, LLC, will perform cremation of the body and no warranties expressed or implied are made, and damages shall be limited to the fee paid.

When cremating, the SIERRA CREMATORY, LLC, will exercise reasonable efforts in keeping cremated remains separate. However, because it is impossible to guarantee or warrant that some bone particles or the residue of one cremation could not possibly be mixed with those of another cremation, I specifically give express permission for:

A) The cremation to take place including incidental or inadvertent commingling of the cremains with residue of prior cremations.

B) The processing of the cremains including crushing or grinding and incidental commingling of the cremains with residue from processing other cremains.

If the undersigned authorized the Mortuary or Crematory to deliver the cremains via Priority Express Mail, he/she does hereby agree to assume all liability for any damages that may arise from any cause growing out of said delivery and to indemnify and hold harmless the Mortuary/Crematory and Funeral Director from any and all claims relating to said shipment. A mailing fee will be charged for packaging, Priority Mail Express Postage, and mailing to any location within the Continental United States. It is further agreed that if no final arrangements are completed after (1) year following the cremation the cremains will be disposed of in a lawful manner without identification by *Kirikos Family Funeral Home, Inc.*

It is the responsibility of the family, NOT the Crematory or Funeral Home to make sure all required signatures are provided. It is also the responsibility of the family, to notify *Kirikos Family Funeral Home, Inc,* whenever any of the information provided changes prior to death.

XX	3/7/23	XX County Manager – 1712 N. Date, T. or C., NM 87901	
Signature	Date	Relationship	Address
Signature	Date	Relationship	Address
Signature	Date	Relationship	Address

KIRIKOS FAMILY FUNERAL HOME, INC.

FUNERAL DIRECTOR REBECCA S. GENTRY **FSP** 970

I HEREBY ACKNOWLEDGE RECEIPT OF THE ABOVE CREMAIN

Signature **Date**

OFFICE OF THE MEDICAL INVESTIGATOR

Heather Jarrell, MD
Chief Medical Investigator
MSC07 4040
1 University of New Mexico
Albuquerque, NM 87131
Telephone: (505) 272-3053
Official website: omi.unm.edu

DATE: _____

DAVE E-VITALS ID NO: _____

OMI CASE NO.: _____

OFFICE OF THE MEDICAL INVESTIGATOR REMOVAL AFFIDAVIT

PART A — DECEDENT DATA

DECEDENT'S LEGAL NAME (First, Middle, Last, Suffix): John Darling

SEX	DATE OF DEATH (Month/Day/Year)	DATE OF BIRTH (Month/Day/Year)
Male	12/26/2022	02/21/1945

PART B (1) — FUNERAL HOME

This authorizes *The Office of the Medical Investigator* in Albuquerque, New Mexico, to release the remains and personal effects of the above listed decedent to the funeral home and/or agent.

Kirikos Family Funeral Home, Inc.
Name of funeral home and/or agent

FOR OUT-OF-TOWN FUNERAL HOMES ONLY

Will the body be embalmed at an Albuquerque funeral home: No [X] Yes [ ] _____ Name of funeral home

Long Distance Transport: Tranzcare

Cremation Permit Request: Yes [X] No [ ] Date Requested: _____ Date Sent: _____

PART B (2) — LEGAL NEXT-OF-KIN or County Agent

NEXT-OF-KIN NAME or County Agent (First, Middle, Last, Suffix)	RELATIONSHIP
Amber Vaughn	County Manager

ADDRESS	CITY	STATE	ZIP
1712 N. Date Street, suite D	T. or C.	NM	87901

TELEPHONE	SIGNATURE
575-894-9548	

PART C — OMI

CASE TYPE (CHOOSE ONE)
AUTOPSY [ ] JT [ ] Physician Name: _____
EXTERNAL [ ] Phone Number: _____

PLACE OF DEATH OCCURRENCE – Give Name of Hospital or Other Facility (If Neither, give Street Address or Location): _____ TIME OF DEATH: _____

BODY READY FOR RELEASE: Yes [ ] No [ ] OMI SIGNATURE: _____

CURRENT WEIGHT: _____ DATE: _____

The State of New Mexico
Office of the Medical Investigator Disclaimer

No death certificate and/or body will be released by the Office of the Medical Investigator to a funeral home until a copy of this form, properly executed, is on file. Once on file 24 hours will be allotted to transport, after which a storage fee of $61.00 a day will be charged to the funeral home.

This form cannot be altered or duplicated.

OMI-Thanatopractice@salud.unm.edu

SIERRA COUNTY INDIGENT BURIAL
APPLICATION AND DECLARATION STATEMENT

Check No._____ Approved Date_____

Amount_____ Denied_____

John Darling 12/26/2022

Name of Deceased Date of Death

02/12/1945 562-58-5585

Date of Birth Social Security #

712 Juniper Street

Address

T. or C. NM

City State

Please Circle

Sierra County Resident? (**YES**)/**NO**

If YES, how long?_____

_____

Name of Nearest Living Relative

_____

Address of Nearest Living Relative

_____

Applicant

_____

Date of Birth Social Security #

_____

Previous Residence

DO YOU HAVE INSURANCE? **YES/NO**

IF YES, NAME OF INSURANCE COMPANY_____

Have **Medicare** or **Medicaid**?

WAS DEATH AS A RESULT OF ACCIDENT OR INJURY? IF YES, EXPLAIN_____

_____

IS THERE ANY LEGAL ACTION PENDING AS RESULT OF ACCIDENT OR INJURY? **YES/NO** IF YES, EXPLAIN_____

_____

HOW MUCH CASH DID DECEDENT HAVE? $_____ $_____ $_____

ON HAND SAVINGS CHECKING

NAME OF BANK OR FINANCIAL INSTITUTION_____

DID DECEDENT **OWN or RENT** A HOME? VALUE $_____ BAL. OWED $_____

IF DECEDENT WAS RENTING, NAME AND ADDESS OF LANDLORD?_____

_____

DID DECEDENT OWN ANY REAL ESTATE? **YES/NO** IF YES, DESCRIBE REAL ESTATE, VALUE, BALANCE OWED AND LOCATION_____

_____

WHAT IS THE APPROXIMATE VALUE OF DECEDENT'S HOUSEHOLD GOODS?_____

DESCRIBE ANY OTHER MAJOR ASSETS (ITEMS OF VALUE OWNED BY DECEDENT)_____

_____

FOR INDIGENT CLAIMS OFFICE USE ONLY

VERIFIED BY:_____

EMPLOYMENT:_____

RESIDENCY:_____

ASSESSOR:_____

RENT:_____

INCOME TAX RETURN:_____

SIERRA COUNTY INDIGENT BURIAL
APPLICATION AND DECLARATION STATEMENT

VEHICLE(S) OWNED BY DECEDENT

1. _____ _____ $_____ _____
MAKE MODEL VALUE BALANCE

2. _____ _____ $_____ _____
MAKE MODEL VALUE BALANCE

NUMBER OF DEPENDANTS?_____

MONTHLY INCOME _____ $_____ $_____
SOURCE OF DECEDENT'S GROSS NET

_____ $_____ $_____
SOURCE OF DECEDENT'S GROSS NET

_____ $_____ $_____
WAGES STILL OWED DECEDENT GROSS NET

DEBTS AMD MONTHLY COMMITMENTS:

PAYMENTS TO :	BALANCE	AMOUNT	PAYMENTS TO	BALANCE	AMOUNT

NAME NEXT OF KIN AND ADDRESS:_____

NEAREST FRIEND AND ADDRESS:_____

ARE ANY OF THE ABOVE ABLE TO ASSIST FINANCIALLY?_____

I HEREBY AUTHORIZE RELEASE OF INFORMATION CONCERNING THE ABOVE STATEMENT TO THE COUNTY OF SIERRA:

I CERTIFY THAT I HAVE READ THIS APPLICATION AND SWEAR THAT THE INFORMATION CONTAINED IN IT IS TRUE TO THE BEST OF MY KNOWLEDGE.

I, UNDERSTAND THAT ALL INFORMATION ON THIS APPLICATION IS SUBJECT TO INVESTIGATION.

I HEREBY CERTIFY THAT I AM UNABLE TO PAY FOR THE COST OF BURIAL IN THE AMOUNT OF $_____ AND QUALIFY UNDER THE PROVISIONS OF THE BURIAL OF INDIGENTS. ANY FALSE STATEMENTS ON THIS FORM MADE KNOWINGLY BY ME CONSTITUTES A FELONY AND COULD RESULT IN A PRISON SENTENCE AND/OR FINE.

_____ DATED THIS ____DAY OF_____, 20____

APPLICANT

STATE OF NEW MEXICO)
)SS.
COUNTY OF SIERRA)

SUBSCRIBED TO AND SWORN TO BEFORE ME THIS_____DAY OF_____,20____

_____MY COMMISSION EXPIRES_____

NOTARY PUBLIC **(SEAL)**

State of New Mexico

Shelly Trujillo
County Clerk
575-894-2840

Candace Chavez
County Treasurer
575-894-3524

Michael Huston
County Assessor
575-894-2589

Tom Pestak
Probate Judge
575-894-2840

SIERRA COUNTY
NEW MEXICO

1712 Date St.
Truth or Consequences, New Mexico 87901

Amber Vaughn, County Manager
575-894-6215 voice 575-894-9548 fax

County of Sierra

Travis Day
Vice Chair
575-894-6215

Hank Hopkins
Commissioner
575-894-6215

James Paxon
Chairman
575-894-6215

Glenn Hamilton
County Sheriff
575-894-9150

March 6, 2023

Amber Vaughn
1712 Date St.
Truth or Consequences, NM 87901

RE: Cremation Approval-Brenden McCutheon B2023-005

Dear Ms. Vaughn:

Mr. McCutheon died 2/14/2023. He resided at Sierra Health and listed no next of kin. No one has come forward to claim the body. He has no assets that I can find. I recommend that the County assume the financial responsibility for the cremation.

Thank you for your attention in this matter, and if you should have any questions or comments, please let me know.

Thank You,

Larita Engle

Larita Engle
IHC Clerk

_____ County Manager-Amber Vaughn

Approved on 7 day of March year 2023

State of New Mexico

Shelly Trujillo
County Clerk
575-894-2840

Candace Chavez
County Treasurer
575-894-3524

Michael Huston
County Assessor
575-894-2589

Tom Pestak
Probate Judge
575-894-2840

SIERRA COUNTY
NEW MEXICO

1712 Date St.
Truth or Consequences, New Mexico 87901

Amber Vaughn, County Manager
575-894-6215 voice 575-894-9548 fax

County of Sierra

Travis Day
Vice Chair
575-894-6215

Hank Hopkins
Commissioner
575-894-6215

James Paxon
Chairman
575-894-6215

Glenn Hamilton
County Sheriff
575-894-9150

March 6, 2023

Amber Vaughn
1712 Date St.
Truth or Consequences, NM 87901

RE: Cremation Approval-Brenden McCutheon

Dear Ms. Vaughn:

Mr. McCutheon died 2/14/2023. He resided at Sierra Health and listed no next of kin. No one has come forward to claim the body. He has no assets that I can find. I recommend that the County assume the financial responsibility for the cremation.

Thank you for your attention in this matter, and if you should have any questions or comments, please let me know.

Thank You,

Larita Engle

Larita Engle
IHC Clerk

_____ County Manager-Amber Vaughn

Approved on _____ day of _____ year_____

KIRIKOS
FAMILY FUNERAL HOME, INC.
SIERRA CREMATORY, LLC

February 17, 2023

Amber Vaughn, Sierra County Manager
County of Sierra
1712 N. Date Street, Suite D
Truth or Consequences, NM 87901

RE: Indigent Claim For: Brenden McCutheon
Date of Death: February 14, 2023

Dear Ms. Vaughn:

We are requesting your signature on the attached Authorization for Cremation form so we can proceed with obtaining a Cremation Permit from the Office of the Medical Investigator for the cremation of Brenden McCutcheon. Mr. McCutcheon died at Sierra Vista Hospital on February 14, 2023. He was a resident of Sierra Health Care Center and had no Next of Kin listed on file and did not have the financial ability to take care if his affairs. We have attached an Application for Indigent Burial for approval. The Office of the Medical Examiner issues the Cremation Permit to us free of charge for Indigent Cases as long as we send them documentation from your office that the case has been approved.

We will appreciate all your efforts and thank you for your consideration and help with regard to the County of Sierra's approval for this Indigent Burial Claim.

Sincerely,

Rebecca S. Gentry
KIRIKOS FAMILY FUNERAL HOME, INC.

Enclosure

303 N. Cedar St.
P.O. Box 112
Truth or Consequences, NM 87901
Telephone
(575) 894-2574
Facsimile
(575) 894-6815
Email
kirikos@kirikosffh.com

SIERRA CREMATORY, LLC.
P. O. Box 112 - 303 Cedar Street
Truth or Consequences, NM 87901
TELEPHONE - 575/894-2574
FAX 575/894-6815

AUTHORIZATION FOR CREMATION

Date of Death: FEBRUARY 14, 2023

Crematory ID # _____

The undersigned hereby authorizes SIERRA CREMATORY, LLC. to cremate the remains of:

BRENDEN		McCUTCHEON	FEBRUARY 14, 2023
First Name	**Middle**	**Last**	**Date of Death**

That he/she has the legal right to authorize and direct the cremation, interment and/or disposition of said remains and agrees to hold the above Crematory and *Kirikos Family Funeral Home, Inc.*, its officers, agents and employees harmless from any and all loss, costs, or damages it or they may suffer or incur by reason of acting upon the order and authorization set forth.

That the remains delivered to the crematory are those only of the deceased named herein.

That the body will be delivered in a suitable, rigid container.

That the Office of the Medical Investigator's signed Cremation Permit will accompany the body.

That the deceased has not had a pacemaker implanted or radiation-producing implant device or any other life-sustaining device that could be explosive. Or, if such a device exists, he/she agrees to have the Funeral Director or others remove it before cremation. He/she also understands that in the event of failure to notify the Funeral Director or others responsible for the removal of such device, he/she will be liable for any damages to the Crematory or injury to crematory personnel.

That ALL non-combustible materials delivered with the body will NOT be returned with the cremated remains, but will become the property of, and be disposed of by the crematory.

I understand that if it is the intention to save ANY items it is my responsibility to remove them before cremation.

The undersigned understands the cremated remains (hereafter referred to as the cremains) are bone fragments which will be pulverized to permit their placement in an urn or other container. In the event the capacity of the urn other container is insufficient to accommodate all of the cremains, the Crematory is hereby authorized to make disposition of the remaining cremains at its discretion, unless otherwise instructed in writing by the undersigned.

That the SIERRA CREMATORY, LLC, will perform cremation of the body and no warranties expressed or implied are made, and damages shall be limited to the fee paid.

When cremating, the SIERRA CREMATORY, LLC, will exercise reasonable efforts in keeping cremated remains separate. However, because it is impossible to guarantee or warrant that some bone particles or the residue of one cremation could not possibly be mixed with those of another cremation, I specifically give express permission for:

A) The cremation to take place including incidental or inadvertent commingling of the cremains with residue of prior cremations.
B) The processing of the cremains including crushing or grinding and incidental commingling of the cremains with residue from processing other cremains.

If the undersigned authorized the Mortuary or Crematory to deliver the cremains via Priority Express Mail, he/she does hereby agree to assume all liability for any damages that may arise from any cause growing out of said delivery and to indemnify and hold harmless the Mortuary/Crematory and Funeral Director from any and all claims relating to said shipment. A mailing fee will be charged for packaging, Priority Mail Express Postage, and mailing to any location within the Continental United States. It is further agreed that if no final arrangements are completed after (1) year following the cremation the cremains will be disposed of in a lawful manner without identification by *Kirikos Family Funeral Home, Inc.*

It is the responsibility of the family, NOT the Crematory or Funeral Home to make sure all required signatures are provided. It is also the responsibility of the family, to notify *Kirikos Family Funeral Home, Inc,* whenever any of the information provided changes prior to death.

That all charges are to be paid before cremation can occur.

XX _____ 3/7/23
Signature Date

XX County Manager – 1712 N. Date, T. or C., NM 87901
Relationship Address

_____
Signature Date

_____
Relationship Address

_____
Signature Date

_____
Relationship Address

KIRIKOS FAMILY FUNERAL HOME, INC.
FUNERAL DIRECTOR REBECCA S. GENTRY **FSP** 970

I HEREBY ACKNOWLEDGE RECEIPT OF THE ABOVE CREMAIN

_____
Signature **Date**

SIERRA COUNTY INDIGENT BURIAL
APPLICATION AND DECLARATION STATEMENT

Check No._____ Approved Date_____

Amount_____ Denied_____

Brenden McCutcheon 2/14/2023

Name of Deceased Date of Death

01/18/1967 065-68-7037

Date of Birth Social Security #

1400 N. Silver Street

Address

T. or C. NM

City State

Please Circle

Sierra County Resident? (**YES**)/**NO**

If YES, how long?_____

_____

Name of Nearest Living Relative

_____

Address of Nearest Living Relative

_____

Applicant

_____

Date of Birth Social Security #

_____

Previous Residence

DO YOU HAVE INSURANCE? **YES/NO**

IF YES, NAME OF INSURANCE COMPANY_____

Have **Medicare** or **Medicaid**?

WAS DEATH AS A RESULT OF ACCIDENT OR INJURY? IF YES, EXPLAIN_____

_____

IS THERE ANY LEGAL ACTION PENDING AS RESULT OF ACCIDENT OR INJURY? **YES/NO** IF YES, EXPLAIN_____

_____

HOW MUCH CASH DID DECEDENT HAVE? $_____ $_____ $_____

ON HAND SAVINGS CHECKING

NAME OF BANK OR FINANCIAL INSTITUTION_____

DID DECEDENT **OWN or RENT** A HOME? VALUE $_____ BAL. OWED $_____

IF DECEDENT WAS RENTING, NAME AND ADDESS OF LANDLORD?_____

_____

DID DECEDENT OWN ANY REAL ESTATE? **YES/NO** IF YES, DESCRIBE REAL ESTATE, VALUE, BALANCE OWED AND LOCATION_____

_____

WHAT IS THE APPROXIMATE VALUE OF DECEDENT'S HOUSEHOLD GOODS?_____

DESCRIBE ANY OTHER MAJOR ASSETS (ITEMS OF VALUE OWNED BY DECEDENT)_____

_____

FOR INDIGENT CLAIMS OFFICE USE ONLY

VERIFIED BY:_____

EMPLOYMENT:_____

RESIDENCY:_____

ASSESSOR:_____

RENT:_____

INCOME TAX RETURN:_____

SIERRA COUNTY INDIGENT BURIAL
APPLICATION AND DECLARATION STATEMENT

VEHICLE(S) OWNED BY DECEDENT

1. _____ _____ $_____ _____
MAKE MODEL VALUE BALANCE

2. _____ _____ $_____ _____
MAKE MODEL VALUE BALANCE

NUMBER OF DEPENDANTS?_____

MONTHLY INCOME _____ $_____ $_____
SOURCE OF DECEDENT'S GROSS NET

_____ $_____ $_____
SOURCE OF DECEDENT'S GROSS NET

_____ $_____ $_____
WAGES STILL OWED DECEDENT GROSS NET

DEBTS AMD MONTHLY COMMITMENTS:

PAYMENTS TO :	BALANCE	AMOUNT	PAYMENTS TO	BALANCE	AMOUNT

NAME NEXT OF KIN AND ADDRESS:_____

NEAREST FRIEND AND ADDRESS:_____

ARE ANY OF THE ABOVE ABLE TO ASSIST FINANCIALLY?_____

I HEREBY AUTHORIZE RELEASE OF INFORMATION CONCERNING THE ABOVE STATEMENT TO THE COUNTY OF SIERRA:

I CERTIFY THAT I HAVE READ THIS APPLICATION AND SWEAR THAT THE INFORMATION CONTAINED IN IT IS TRUE TO THE BEST OF MY KNOWLEDGE.

I, UNDERSTAND THAT ALL INFORMATION ON THIS APPLICATION IS SUBJECT TO INVESTIGATION.

I HEREBY CERTIFY THAT I AM UNABLE TO PAY FOR THE COST OF BURIAL IN THE AMOUNT OF $_____ AND QUALIFY UNDER THE PROVISIONS OF THE BURIAL OF INDIGENTS. ANY FALSE STATEMENTS ON THIS FORM MADE KNOWINGLY BY ME CONSTITUTES A FELONY AND COULD RESULT IN A PRISON SENTENCE AND/OR FINE.

_____ DATED THIS ____DAY OF_____, 20____

APPLICANT

STATE OF NEW MEXICO)
)SS.
COUNTY OF SIERRA)

SUBSCRIBED TO AND SWORN TO BEFORE ME THIS_____DAY OF_____,20____

_____MY COMMISSION EXPIRES_____

NOTARY PUBLIC **(SEAL)**

State of New Mexico

Shelly Trujillo
County Clerk
575-894-2840

Candace Chavez
County Treasurer
575-894-3524

Michael Huston
County Assessor
575-894-2589

Thomas Pestak
Probate Judge
575-894-2840

SIERRA COUNTY
NEW MEXICO

1712 N Date Street
Truth or Consequences, New Mexico 87901

Amber Vaughn
County Manager
575-894-6215 voice 575-894-9548 fax

County of Sierra

Travis L Day
Commissioner-Chair
575-894-6215

James E Paxon
Commissioner-Vice-Chair
575-894-6215

Hank Hopkins
Commissioner
575-894-6215

Joshua Baker
County Sheriff
575-894-9150

March 21, 2023

RISE Grant Application
Letter of Support

To Whom It May Concern:

Sierra County is a small rural community with a very concerning behavioral health and substance use disorder population. Statistics show Sierra County has the 6th highest poverty rate in the state. Our county has a very high suicide rate, a high overdose rate and a very high recidivism rate – over 90%.

Due to our rural status, we have very limited resources. The closest in-patient behavioral health/mental health beds are over 100 miles away. We do not have a crisis response team or a facility where law enforcement officers can take someone in a crisis. Many of these individuals in crisis are disturbing the peace, so when law enforcement arrives on the scene, they have no option except to take the individual to jail. These substance abuse and behavioral health dual diagnosis individuals account for some of our high recidivism stats.

Sierra County supports the RISE grant program and their goal to see those individuals receive treatment. It is our goal also to lower our recidivism rate and see that population have healthy support for healing and recovery. This grant will allow Sierra County to continue to develop programs and services for that population in our county.

Thank you

Travis L Day
Commissioner/Chair
Sierra County

State of New Mexico

Shelly K. Trujillo
County Clerk
575-894-2840

Candace Chavez
County Treasurer
575-894-3524

Michael D. Huston
County Assessor
575-894-2589

Thomas Pestak
Probate Judge
575-894-2840

SIERRA COUNTY
NEW MEXICO

1712 North Date Street
Truth or Consequences, New Mexico 87901

Amber Vaughn
County Manager
575-894-6215 voice 575-894-9548

County of Sierra

James E. Paxon
Commissioner District 1
575-894-6215

Travis Day
Commissioner District 2
575-894-6215

Hank Hopkins
Commissioner District 3
575-894-6215

Joshua Baker
County Sheriff
575-894-9150

March 21st, 2022

The Office of Ben Ray Luján
U.S. Senator for New Mexico
120 South Federal Place
Suite 302
Santa Fe, NM 87501

Dear Senator Luján,

Re: Sierra County 1950's Sierra Vista Hospital Construction – Letter of support

On behalf of the Sierra County Commission please accept this letter of support to Sierra Vista Hospital and Clinics in their application for the FY24 Congressionally Directed Spending Request for Sierra Vista Hospital's construction project needed to bring modern infrastructure to a hospital developed in the 1950s.

The Sierra Vista Hospital is located within Sierra County and provides healthcare to its residents. This funding will enhance healthcare in Sierra County and surrounding areas.

Sierra County is in full support of this effort and supports providing adequate healthcare to the residents of Sierra County.

Sincerely,

Travis Day
Commission Chair
Sierra County

State of New Mexico

Shelly K. Trujillo
County Clerk
575-894-2840

Candace Chavez
County Treasurer
575-894-3524

Michael D. Huston
County Assessor
575-894-2589

Thomas Pestak
Probate Judge
575-894-2840

SIERRA COUNTY
NEW MEXICO

1712 North Date Street
Truth or Consequences, New Mexico 87901

Amber Vaughn
County Manager
575-894-6215 voice 575-894-9548

County of Sierra

James E. Paxon
Commissioner District 1
575-894-6215

Travis Day
Commissioner District 2
575-894-6215

Hank Hopkins
Commissioner District 3
575-894-6215

Joshua Baker
County Sheriff
575-894-9150

March 21st, 2023

To whom it may concern:

Sierra County Commission is pleased to support Western University, in partnership with Freeport McMoRan, Grant County and local municipalities pursuit of the construction of a regional vocational center. The center will provide necessary training for various skillsets that are important to all the communities in Southwest New Mexico.

Appropriation of funding will enhance education in the Southwest region of New Mexico and allow individuals within the immediate and surrounding areas to continue their education. If funded, this project will have a great impact on the future growth and stability of the education and economy in Southwest New Mexico.

Sincerely,

Travis Day
Commission Chair
Sierra County

Dora Miranda

From: Dora Miranda
Sent: Wednesday, January 25, 2023 9:01 AM
To: Amber Vaughn
Subject: New submission from Request to Add Item to Commission Agenda

Hi Amber,

FYI:

From: Sierra County Government <sbartoo@sierraco.org>
Sent: Wednesday, January 25, 2023 8:50 AM
To: Kristie Wilson <kwilson@sierraco.org>
Subject: New submission from Request to Add Item to Commission Agenda

Requested Commission Meeting Date

03/21/2023

Name of the Company, Entity or Individual

USDA Forest Service

Point of Contact

Anthony James

Address

1804 N. Date Street
Truth or Consequences, New Mexico 87901
United States
Map It

Email Address

anthony.james@usda.gov

Phone Number:

number including area code	phone type: home phone, mobile, work #
5757405202	cell

Item(s) for Consideration:

Prescribed and wildfire planning for 2023

Who will be impacted of affected, and how?

County wide

Possible negative results:

Smoke and property loss

Desired outcomes:

Information sharing

Will you make a public presentation?

Yes

I hereby certify that the contents in this report are true and correct to the best of my knowledge and includes all funds.

DEPARTMENT OF FINANCE AND ADMINISTRATION
LOCAL GOVERNMENT DIVISION
RECAP AND RECONCILIATION REPORT

Entity COUNTY OF SIERRA
Period Ending TUESDAY FEBRUARY 28, 2023
Prepared by Cindy Rogers
CINDY [illegible]S1A [illegible]GLPRIN

FUND#	FUND NAME	BEGINNING CASH BALANCE CURRENT-FYR	REVENUES TO-DATE	TRANSFERS TO-DATE	EXPENDATURES TO-DATE	ENDING CASH BALANCE FOR PERIOD	ADD OUTSTANDING CHECKS	LESS DEPOSITS IN TRANSIT	ADJUSTMENTS PER BANK (+ / -)	ADJUSTED BALANCE FOR PERIOD	BALANCE PER BANK STATEMENT	FUND DIFFERENCE	RUNNING DIFFERENCE
101	CASH ON HAND										385.00	-385.00	-385.00
103	GENERAL FUND										6082.50	-6082.50	-6467.50
104	LANDFILL FINANCIAL ASSURANCE												-6467.50
112	GENERAL FUND										4123295.43	-4123295.43	-4129762.93
120	GENERAL FUND						5.00		-110.36	-105.36	19049745.03	-19049850.39	-23179613.32
401	GENERAL	2574728.73	3679144.54	-1153610.00	3981350.89	1118912.38	24837.60			1143749.98		1143749.98	-22035863.34
402	ROAD DEPARTMENT	134267.02	292355.03	294394.00	753443.24	-42427.19	1874.76			-40552.43		-40552.43	-22076415.77
403	FARM & RANGE	0.28		12953.50	20881.07	-7927.29				-7927.29		-7927.29	-22084343.06
404	WHITE SANDS MISSLE RANGE	2186.31	2029.75		3628.96	589.10	6.47			595.57		595.57	-22083747.49
405	LANDFILL	89387.12	74736.74	-8500.00	77872.97	77750.89	1991.29			79742.18		79742.18	-22004005.31
406	COUNTY INDIGENT	41553.68	268374.15	49000.00	277749.07	81178.76	8380.43			89559.19		89559.19	-21914446.12
407	HILLSBORO FIRE DEPT.	364771.57	129376.00		39117.88	455029.69	154.45			455184.14		455184.14	-21459261.98
409	ARREY/DERRY FIRE DEPT.	95511.05	122660.00		69114.57	149056.48	1976.97			151033.45		151033.45	-21308228.53
410	WINSTON FIRE DEPARTMENT	229937.04	123729.70		52518.50	301148.24	4346.86			305495.10		305495.10	-21002733.43
411	MONTICELLO FIRE DEPARTMENT	268667.80	127704.00		152327.85	244043.95	1262.22			245306.17		245306.17	-20757427.26
412	NMGRT HOSPITAL FUND	40490.28	463877.99		453794.03	50574.24				50574.24		50574.24	-20706853.02
413	CABALLO FIRE DEPARTMENT	176795.75	178596.13		71674.63	283717.25	98.39			283815.64		283815.64	-20423037.38
414	LAS PALOMAS FIRE DEPT	226251.33	100813.00		28824.28	298240.05	260.99			298501.04		298501.04	-20124536.34
416	STATE SP PROJECTS	122844.37	213203.00		89204.13	246843.24				246843.24		246843.24	-19877693.10
417	STATE CAP PROJECTS	122905.05	186697.00		73385.47	236216.58				236216.58		236216.58	-19641476.52
418	STATE SB PROJECTS	76092.56	135650.00		48114.70	163627.86				163627.86		163627.86	-19477848.66
419	COMMUNITY PROJECTS			85475.00	85923.16	-448.16				-448.16		-448.16	-19478296.82
422	REAPPRAISAL FUND	89760.11	32491.51		63124.14	59127.48	9212.74			68340.22		68340.22	-19409956.60
424	LG ABATEMENT FUND												-19409956.60
425	POVERTY CREEK FIRE DEPARTMENT	142059.08	85693.00		38570.41	189181.67	80.11			189261.78		189261.78	-19220694.82
426	SIERRA ADMIN. FIRE	76818.43	96103.00		36832.67	136088.76	40.01			136128.77		136128.77	-19084566.05
427	NAT'L OPIOID SETTLEMENT		217521.95			217521.95				217521.95		217521.95	-18867044.10
474	TAXES PAID IN ADVANCE	27061.48	-19129.19			7932.29				7932.29		7932.29	-18859111.81
477	LODGERS TAX/PROMO FUND	20610.74	6429.71		12087.88	14952.57				14952.57		14952.57	-18844159.24
481	UNDISTRIBUTED CURRENT TAXES		3450436.54			3450436.54				3450436.54		3450436.54	-15393722.70
482	UNDISTRIBUTED DELQ TAXES												-15393722.70
500	GRANT PROJECTS	1401064.85	1771567.94		2062113.95	1110518.84	51811.56			1162330.40		1162330.40	-14231392.30
502	LEGISLATIVE APPROPRIATIONS	538071.36	115845.26		251303.78	402612.84	5577.54			408190.38		408190.38	-13823201.92
506	INTERNAL CAPITAL IMPROVEMENTS												-13823201.92
507	ELECTRONIC MONITORING		825.00	15712.50	16448.87	88.63				88.63		88.63	-13823113.29
508	DWI PROGRAM FEES	91245.44	14617.00		18894.19	86968.25				86968.25		86968.25	-13736145.04
509	DWI DISTRIBUTION	38770.66	54921.00		80793.99	12897.67	167.60			13065.27		13065.27	-13723079.77
510	DWI GRANT		49085.14		42313.84	6771.30	27.00			6798.30		6798.30	-13716281.47
511	LOCAL ECONOMIC DEVELOPMENT	4000000.00				4000000.00				4000000.00		4000000.00	-9716281.47
512	LATCF-FEDERAL		3450600.00			3450600.00				3450600.00		3450600.00	-6265681.47
548	MENTAL HEALTH (COMM.GRT)	48989.48	17365.62		520.98	65834.12				65834.12		65834.12	-6199847.35
550	UNDERWOOD WATER		476.76		476.76								-6199847.35
551	SIERRA SOIL WATER DIST	7925.35	90656.37		92705.59	5876.13				5876.13		5876.13	-6193971.22
552	SPACEPORT GRT	58131.64	326903.67		319732.99	65302.32				65302.32		65302.32	-6128668.90
553	T OR C SCHOOL 254	13727.76	108967.89		106577.68	16117.97				16117.97		16117.97	-6112550.93
554	CABALLO WATER	317.85	8872.36		8789.22	400.99				400.99		400.99	-6112149.94
575	CITY OF TRUTH OR CONSEQUENCES	6633.06	63413.95		65181.89	4865.12				4865.12		4865.12	-6107284.82
576	VILLAGE OF WILLIAMSBURG	511.38	2732.51		3015.71	228.18				228.18		228.18	-6107056.64
577	CITY OF ELEPHANT BUTTE	6362.95	74599.38		77627.71	3334.62				3334.62		3334.62	-6103722.02
591	STATE DEBT SERVICE	11705.93	165478.50		167960.65	9223.78				9223.78		9223.78	-6094498.24
592	CATTLE	37.51	5550.07		5326.74	260.84				260.84		260.84	-6094237.40
593	SHEEP, GOATS AND ALPACA	1.44	7.74		9.18								-6094237.40
594	EQUINES, SWINE AND RATITES	41.98	257.76		299.74								-6094237.40

I hereby certify that the contents in this report are true and correct to the best of my knowledge and includes all funds.

DEPARTMENT OF FINANCE AND ADMINISTRATION
LOCAL GOVERNMENT DIVISION
RECAP AND RECONCILIATION REPORT

Entity COUNTY OF SIERRA
Period Ending TUESDAY FEBRUARY 28, 2023
Prepared by Cindy Raguez
CINDY BRS1A GLPR18

FUND#	FUND NAME	BEGINNING CASH BALANCE CURRENT-FYR	REVENUES TO-DATE	TRANSFERS TO-DATE	EXPENDATURES TO-DATE	ENDING CASH BALANCE FOR PERIOD	ADD OUTSTANDING CHECKS	LESS DEPOSITS IN TRANSIT	ADJUSTMENTS PER BANK (+ / -)	ADJUSTED BALANCE FOR PERIOD	BALANCE PER BANK STATEMENT	FUND DIFFERENCE	RUNNING DIFFERENCE
595	DAIRY CATTLE		5.00		5.00								-6094237.40
596	COST TO STATE	1011.86	10125.00		8045.00	3091.86				3091.86		3091.86	-6091145.54
597	STATE P & I	3140.82	33242.52		25198.50	11184.84				11184.84		11184.84	-6079960.70
598	NM CHILDREN'S TRUST FUND	195.00	645.00		810.00	30.00				30.00		30.00	-6079930.70
599	BISON	1.97	0.28		2.25								-6079930.70
601	SVH 2 MIL LEVY	17214.50	37628.96		50584.99	4258.47				4258.47		4258.47	-6075672.23
603	AMBULANCE SERVICE	21999.37	20000.00		21321.84	20677.53				20677.53		20677.53	-6054994.70
604	LAW ENFORCEMENT PROTECTION	33039.67	56000.00		123994.94	-34955.27				-34955.27		-34955.27	-6089949.97
605	CORRECTION FEE FUND		381346.82	655500.00	1090710.26	-53863.44	98146.99			44283.55		44283.55	-6045666.42
606	EMERGENCY COMMUNICATIONS (GRT)	165364.20	412433.92	-200500.00	113998.17	263299.85				263299.85		263299.85	-5782366.57
609	EMS (COMM. GRT)	7451.38	4341.41		130.23	11662.56				11662.56		11662.56	-5770704.01
611	HILLSBORO EMS	18625.67	6170.00		1658.78	23136.89				23136.89		23136.89	-5747567.12
621	LAW ENFORC TASK FORCE GRANT												-5747567.12
622	LAW ENFOR CONTROL SUBSTANCE												-5747567.12
624	CLERK EQUIP RECORDING FEE	148903.17	20936.40		2151.80	167687.77				167687.77		167687.77	-5579879.35
625	COUNTY COMMUNITY BUILDINGS												-5579879.35
627	SIERRA COUNTY FLOOD COMMISSION	965492.42	157598.89		173295.41	949795.90	7525.91			957321.81		957321.81	-4622557.54
629	EMERGENCY MANAGEMENT SERVICES		5675.00	40575.00	94229.97	-47979.97	42.00			-47937.97		-47937.97	-4670495.51
633	LAS PALOMAS EMS	2974.21	7278.00		2710.40	7541.81	90.00			7631.81		7631.81	-4662863.70
634	SIERRA COUNTY REGIONAL DISPATCH	343818.85	281096.02	200500.00	581941.10	243473.77	1238.73			244712.50		244712.50	-4418151.20
635	TREASURER'S FEES	22557.29	6514.10		3440.40	25630.99				25630.99		25630.99	-4392520.21
639	ROAD DEPT FEMA FUNDS												-4392520.21
640	FLOOD COMMISSION FEMA FUNDS	204307.00				204307.00				204307.00		204307.00	-4188213.21
641	FIRE DEPT FEMA FUNDS												-4188213.21
800	HOLDING LINE ITEMS FOR PYRL CO												-4188213.21
701	BOND												-4188213.21
702	SCHOOL - OPERATIONAL	4303.66	60837.67		61750.24	3391.09				3391.09		3391.09	-4184822.12
703	SCHOOL - DEBT	48636.65	687565.62		697877.40	38324.87				38324.87		38324.87	-4146497.25
704	SCHOOL - CAPITAL IMP (SB9)	17214.50	243312.50		246962.56	13564.44				13564.44		13564.44	-4132932.81
804	OVERPAYMENT ON TAXES	18719.38	-9082.00			9637.38				9637.38		9637.38	-4123295.43
805	PROPERTY TAX SUSPENSE												-4123295.43
901	GENERAL FUND	2356375.10	23867.23			2380242.33				2380242.33		2380242.33	-1743053.10
905	LANDFILL FINANCIAL ASSURANCE	124145.35	172.57	8500.00		132817.92				132817.92		132817.92	-1610235.18
927	FLOOD COMMISSION	1581822.09	28413.09			1610235.18				1610235.18		1610235.18	
	GRAND TOTALS	17253554.43	18757361.47		13050453.20	22960462.70	219155.62		-110.36	23179507.96	23179507.96		

BANK & INVESTMENTS PER GL 22960462.70

		Begin-Fiscal Balance	Yearly Cash Receipts	Yearly Cash Transfer-out	Yearly Cash Transfer-in	Yearly Cash Disbursement	TOTAL
PART I							
**SECTION-A							
BUDGETED FUNDS							
LIMITED FUNDS							
GENERAL FUND	401	2,574,728.73	3,679,144.54	1,153,610.00		3,981,350.89	1,118,912.38
ROAD DEPARTMENT	402	134,267.02	282,355.03		294,394.00	753,443.24	42,427.19-
FARM & RANGE	403	0.28			12,953.50	20,881.07	7,927.29-
WHITE SANDS MISSLE RANGE	404	2,188.31	2,029.75			3,628.96	589.10
LANDFILL	405	89,387.12	74,736.74	8,500.00		77,872.97	77,750.89
COUNTY INDIGENT CLAIMS	406	41,553.68	268,374.15		49,000.00	277,749.07	81,178.76
NMGRT HOSPITAL FUND	412	40,490.28	463,877.99			453,794.03	50,574.24
STATE COOP PROJECTS	416	122,844.37	213,203.00			89,204.13	246,843.24
STATE CAP PROJECTS	417	122,905.05	186,697.00			73,385.47	236,216.58
STATE SB PROJECTS	418	76,092.56	135,650.00			48,114.70	163,627.86
COMMUNITY PROJECTS	419				85,475.00	85,923.16	448.16-
1% COUNTY APPRAISAL	422	89,760.11	32,491.51			63,124.14	59,127.48
LG ABATEMENT OPIOD FUND	424						
NAT'L OPIOID SETTLEMENT	427		217,521.95				217,521.95
LODGERS'S TAX PROMO FUND	477	20,610.74	6,429.71			12,087.88	14,952.57
GRANT PROJECTS	500	1,401,064.85	1,771,567.94			2,062,113.95	1,110,518.84
LEGISLATIVE APPROPRIATE	502	538,071.36	115,845.26			251,303.78	402,612.84
INTERNAL CAPITAL IMP.	506						
ELECTRONIC MONITORING	507		825.00		15,712.50	16,448.87	88.63
DWI PROGRAM FEES	508	91,245.44	14,617.00			18,894.19	86,968.25
DWI DISTRIBUTION	509	38,770.66	54,921.00			80,793.99	12,897.67
DWI GRANT	510		49,085.14			42,313.84	6,771.30
LOCAL ECONOMIC DEV.	511	4,000,000.00					4,000,000.00
US DEPARTMENT TREASURY	512		3,450,600.00				3,450,600.00
MENTAL HEALTH	548	48,989.48	17,365.62			520.98	65,834.12
SVH 2 MILL LEVY	601	17,214.50	37,628.96			50,584.99	4,258.47
LAW ENFORCEMENT PROTECT	604	33,039.67	56,000.00			123,994.94	34,955.27-
CORRECTION FUND	605		381,346.82		655,500.00	1,090,710.26	53,863.44-
EMERGENCY COMMUNICATIONS	606	165,364.10	412,433.92	200,500.00		113,998.17	263,299.85
TASK FORCE GRANT	621						
LAW/ENF CONTROL SUB	622						
CLERK/EQUIP/RECORD FEE	624	148,903.17	20,936.40			2,151.80	167,687.77
COUNTY COMMUNITY BLDGS	625						
SIERRA COUNTY FLOOD COMM.	627	965,492.42	157,598.89			173,295.41	949,795.90
EMERGENCY MGMT SERVICES	629		5,675.00		40,575.00	94,229.97	47,979.97-
SCRDA/E-911	634	343,818.85	281,096.02		200,500.00	581,941.10	243,473.77
TREASURER FEES	635	22,557.29	6,514.10			3,440.40	25,630.99
ROAD DEPARTMENT FEMA	639						
FLOOD COMMISSION FEMA	640	204,307.00					204,307.00
FIRE DEPT FEMA	641						
PAYROLL HOLDING	300						
**SUBTOTAL-A-BUDGETED FUNDS		11,333,667.04	12,396,568.44	1,362,610.00	1,354,110.00	10,647,296.35	13,074,439.13
**SECTION-B-INVESTMENTS							
GENERAL FUND	901	2,356,375.10	23,867.23				2,380,242.33
LANDFILL FINANCIAL ASSUR.	905	124,145.35	172.57		8,500.00		132,817.92
FLOOD COMMISSION	927	1,581,822.09	28,413.09				1,610,235.18
**SUBTOTAL-B-INVESTMENTS		15,396,009.58	12,449,021.33	1,362,610.00	1,362,610.00	10,647,296.35	17,197,734.56

		Begin-Fiscal Balance	Yearly Cash Receipts	Yearly Cash Transfer-out	Yearly Cash Transfer-in	Yearly Cash Disbursement	TOTAL
**SECTION-C-FIRE							
HILLSBORO FIRE	407	364,771.57	129,376.00			39,117.88	455,029.69
ARREY/DERRY FIRE	409	95,511.05	122,660.00			69,114.57	149,056.48
WINSTON FIRE	410	229,937.04	123,729.70			52,518.50	301,148.24
MONTICELLO FIRE	411	268,667.80	127,704.00			152,327.85	244,043.95
CABALLO FIRE	413	176,795.75	178,596.13			71,674.63	283,717.25
LAS PALOMAS FIRE	414	226,251.33	100,813.00			28,824.28	298,240.05
POVERTY CREEK FIRE	425	142,059.08	85,693.00			38,570.41	189,181.67
SIERRA ADMIN. FIRE	426	76,818.43	96,103.00			36,832.67	136,088.76
**SUBTOTAL-C-FIRE		1,580,812.05	964,674.83			488,980.79	2,056,506.09
**SECTION-D-EMS							
SIERRA AMBULANCE FUND	603	21,999.37	20,000.00			21,321.84	20,677.53
E M S	609	7,451.38	4,341.41			130.23	11,662.56
HILLSBORO EMS	611	18,625.67	6,170.00			1,658.78	23,136.89
LAS PALOMAS EMS	633	2,974.21	7,278.00			2,710.40	7,541.81
**SUBTOTAL-D-EMS		51,050.63	37,789.41			25,821.25	63,018.79
TOTAL PART 1		**1,631,862.68**	**1,002,464.24**			**514,802.04**	**2,119,524.88**

		Begin-Fiscal Balance	Yearly Cash Receipts	Yearly Cash Transfer-out	Yearly Cash Transfer-in	Yearly Cash Disbursement	TOTAL
PART II TREASURERS TAX FUNDS							
**SECTION-A							
DISTRIBUTION OF SPECIAL DIST							
UNDERWOOD WATER CABALLO	550		476.76			476.76	
SIERRA SOIL CONS. DIST.	551	7,925.35	90,656.37			92,705.59	5,876.13
CABALLO WATER	554	317.85	8,872.36			8,789.22	400.99
SUBTOTAL-B SPECIAL DISTRICTS		8,243.20	100,005.49			101,971.57	6,277.12
**SECTION-B							
DISTRIBUTION TO MUNI'S							
CITY OF T OR C	575	6,633.06	63,413.95			65,181.89	4,865.12
VILLAGE OF WILLIAMSBURG	576	511.38	2,732.51			3,015.71	228.18
CITY OF ELEPHANT BUTTE	577	6,362.95	74,599.38			77,627.71	3,334.62
**SUBTOTAL-B-MUNI'S		13,507.39	140,745.84			145,825.31	8,427.92
**SECTION-C							
DIST. TO STATE OF NEW MEXICO							
DEBT SERVICE	591	11,705.93	165,478.50			167,960.65	9,223.78
CATTLE	592	37.51	5,550.07			5,326.74	260.84
SHEEP, GOATS AND ALPACA	593	1.44	7.74			9.18	
EQUINES, SWINE & RATITES	594	41.98	257.76			299.74	
DAIRY CATTLE	595		5.00			5.00	
COST TO STATE	596	1,011.86	10,125.00			8,045.00	3,091.86
STATE P&I FUND	597	3,140.82	33,242.52			25,190.50	11,184.84
CHILD TRUST FUND ACT	598	195.00	645.00			810.00	30.00
BISON LEVY	599	1.97	0.28			2.25	
**SUBTOTAL-C-STATE OF NM		16,136.51	215,311.87			207,657.06	23,791.32
**SECTION-D							
DISTRIBUTION TO SCHOOLS							
BOND SERIES ACCOUNT	701						
T OR C SCHOOLS	702-704	70,154.81	991,715.79			1,006,590.20	55,280.40
**SUBTOTAL-D-SCHOOLS		70,154.81	991,715.79			1,006,590.20	55,280.40
**SECTION-E							
OTHER TRUST ACCOUNTS							
OVERPAYMENT OF TAXES	804	18,719.38	9,082.00-				9,637.38
SPACEPORT AUTHORITY	552	58,131.64	326,903.67			319,732.99	65,302.32
T OR C SCHOOL	553	13,727.76	108,967.89			106,577.68	16,117.97
**SUBTOTAL-E-OTHER TRUST		90,578.78	426,789.56			426,310.67	91,057.67
**SECTION-F							
UNDISTRIBUTED TAX REVENUES							
PROPERTY TAX SUSPENSE	805						
TAXES PAID IN ADVANCE	474	27,061.48	19,129.19-				7,932.29
UNDIST. CURRENT TAX	481		3,450,436.54				3,450,436.54
UNDIST. DELINQUENT TAX	482						
**SUBTOTAL-G-UNDIST. TAX REV		27,061.48	3,431,307.35				3,458,368.83
TOTAL PART II		225,682.17	5,305,875.90			1,888,354.81	3,643,203.26
TOTAL OF PART I & II		17,253,554.43	18,757,361.47	1,362,610.00	1,362,610.00	13,050,453.20	22,960,462.70

R E C O N C I L I A T I O N
February 28, 2023

						Maturity	
ACCOUNT	XXXXX5953	1 YR	C.D.	CITIZENS BANK	2.29%	8/20/2023	270,814.35
ACCOUNT	XXXXX5950	2 YR	C.D.	CITIZENS BANK	2.26%	8/20/2024	268,827.90
ACCOUNT	XXXXX5951	1 YR	C.D.	CITIZENS BANK	0.89%	3/10/2023	266,133.14
ACCOUNT	XXXXX5952	1 YR	C.D.	CITIZENS BANK	0.89%	3/30/2023	139,990.83
ACCOUNT	XXXXX0418	3 YR	C.D.	FIRST SAVINGS	1.85%	3/3/2023	74,399.69
ACCOUNT	XXXX8197		MMA	FIRST SAVINGS	0.47%		100,649.18
ACCOUNT	STO # 7935		GENERAL	LGIP-NM STATE TREASURER		4.43%	1,259,427.24
Total 901							2,380,242.33
ACCOUNT	XXXXX6311		MMA-LANDFILL F	CITIZENS BANK	0.20%		132,817.92
ACCOUNT	STO # 7955		LGIP-NM STATE TREASURER (FLOOD)		4.43%		1,610,235.18
							4,123,295.43

CITIZENS BANK-PUBLIC FUNDS NOW	19,049,745.03
LESS: OUTSTANDING CHECKS - TREASURER	(5.00)
LESS: OUTSTANDING CHECKS - ACCOUNTS PAYABLE/ PAYROLL	(219,150.62)
	18,830,589.41
CASH ON HAND	385.00
CREDIT CARD PAYMENTS	6,082.50
In transit	110.36
	4,123,295.43
Total	**22,960,462.70**
TFFS	**22,960,462.70**

NMRLD

NEW MEXICO
REGULATION &
LICENSING DEPARTMENT

STATE OF NEW MEXICO
MICHELLE LUJAN GRISHAM, GOVERNOR
Linda M. Trujillo, Superintendent
Andrew Vallejos, Director

January 31, 2023

Certified Mail No.: 7021 2720 0001 2205 0733

Sierra County
Clerk: Connie Greer (R)
100 N. Date Street - Suite 6
Truth or Consequences, NM 87901

Lic. No. /Appl. No.:	**License No. 0603**
Name of Applicant:	R and W, LLC
Doing Business As:	Diamond Bar
Proposed Location:	Hwy 52 S, Winston, NM 87943

The Director of the Alcoholic Beverage Control Division (ABC) has reviewed the referenced Application and granted **Preliminary Approval.** It is being forwarded to you for Local Option District approval or disapproval of the Liquor License Application.

Notice of the Public Hearing required by the Liquor Control Act **shall be given by the governing body by publishing a notice** of the date, time, and place of the hearing **twice during the 30 days prior to the hearing** in a newspaper of general circulation within the territorial limits of the governing body. **The first notice must be published at least thirty (30) days before the hearing. Both publications must occur before a hearing can be conducted.** The notice shall include:

(A) Name and address of the Applicant/Licensee;
(B) The action proposed to be taken;
(C) The location of the licensed premises.

In addition, if the Local Option District has a website, **the Notice shall also be published on the website.**

While the law states that "within forty-five **(45)** days after receipt of a Notice from the Alcoholic Beverage Control, the governing body shall hold a Public Hearing in the question of whether the department should approve the proposed issuance or transfer", we recognize the potential for conflict between the requirement for publication of 30 day notice and the 45 day hearing requirement.

With that in mind, when a local governing body receives a liquor license application from ABC, that governing body has a couple of options:

1) Hold a hearing on the license application within the statutory time frame of forty-five (45) days, as required by the Liquor Control Act, and comply with all other statutory and regulatory procedures and notify ABC of your decision within thirty (30) days of the hearing;
2) Request from ABC an extension of time, past the forty-five (45) days, designating how much additional time will be needed to conduct the hearing in compliance with all statutory and

regulatory procedures. After the extension is granted and the hearing is held, notify ABC of your decision within thirty (30) days of the hearing;

ABC has no preference in the option you choose.

The governing body is required to send notice by certified mail to the Applicant of the date, time, and place of the Public Hearing. The governing body may designate a Hearing Officer to conduct the hearing. **A record shall be made** of the hearing.

The Applicant is seeking a Transfer of Ownership of Dispenser Liquor License No. 0603.

Within thirty (30) days after the Public Hearing, the governing body shall notify ABC of their decision to approve or disapprove the issuance or transfer of the license by signing the enclosed original Page 1 of the Application. The original Page 1 of the Application must be returned together with the notices of publication. **If the Governing Body fails to either approve or disapprove the issuance or transfer of the license within thirty days after the Public Hearing, the Director may issue the license.**

If the Governing Body disapproves the issuance or transfer of the license, it shall notify ABC within thirty (30) days setting forth the reasons for the disapproval. A copy of the Minutes of the Public Hearing shall be submitted to ABC with the Notice of Disapproval (*Page 1 of the Application, noting disapproval*).

Respectfully,

Desirae D. Griego
Admin Law Judge | Hearing Officer
NM Regulation & Licensing Department
Alcoholic Beverage Control Division
Phone: (505) 476-4552 | (505) 795-4091
Email: Desirae.Griego@rld.nm.gov

Enclosures:

1. Original Page 1 of the Application (*must be signed and returned w/notices of publication*)
2. Copy of Page 2 of the Application
3. Copy of Public Comment

NMRLD
NEW MEXICO REGULATION & LICENSING DEPARTMENT

STATE OF NEW MEXICO
MICHELLE LUJAN GRISHAM, GOVERNOR
Linda M. Trujillo, Superintendent
Andrew Vallejos, Director

Transfer of Dispenser Type Liquor Application | $200.00 Application Fee, per statute

ABC USE ONLY: Application Fee $ 200.00 Received on: 11-9-2022 Receipt No. Check #623
License Fee $ _____ Received on: _____ Receipt No. _____
Application Number: _____ Local Option District: _____

License Number: 0603 License Type: Dispenser
Record Owner of Existing License: Richard L. Miranda
Current D/B/A Name: Diamond Bar
Current Premises Address: HWY 52 S, Winston, NM 87943
Current LOD: Sierra County Is License moving out of Local Option District? ☐Yes ☐No

Check appropriate boxes
Application is for: ☒Transfer of Ownership ☐Transfer of Ownership and Location ☐Transfer of Location Only
Applicant is ☐Individual ☐Limited Liability Company ☐Corporation ☐Partnership (General/Limited)

NAME OF APPLICANT: R and W, LLC
D/B/A Name to be used: Diamond Bar Business Phone No: 575-740-2208
Mailing Address: P. O. Box 787, Williamsburg, NM 87942-0787
Email (required) reedtire@yahoo.com
Physical location where license is to be used: ~~109 Broadway, Winston, NM 87493~~ Hwy 52 S, Winston, NM 87943
County: Sierra (Include street number / highway number / state road, city, state, and zip code)
Are alcoholic beverages currently being dispensed at the proposed location ☐Yes ☐No If Yes, License # / Type: Dis 0603
Contact Person: Jerry Hamm Phone #: 505-264-6316 Email: jhammlbc@aol.com
I, (print name) Sara Myers, as (title) Manager being first duly sworn upon oath deposes and says: that he/she is the applicant or is authorized by the applicant to make this application; that he/she has read the same; knows the contents therein contained are true. Applicant(s) agree(s) that if any statements or representations herein are found to be false, the Director may refuse to issue or renew the license or may cause the license to be revoked at any time.

You must sign and date this form before a Notary Public.
Signature of Applicant: Sara Myers Date: 9-8-2022

STATE OF NEW MEXICO
NOTARY PUBLIC
Amanda B. Cardona
Commission No. 1094124
August 17, 2025

Notary Public Use Only: (State of New Mexico, County of Sierra
SUBSCRIBED AND SWORN TO before me this 8th day of September, 2022
By: Sara Myers Notary Public: Amanda B. Cardona
Date my Commission Expires: Aug. 17, 2025

Local Option District Use Only: Local Governing Body of _____ City, County, Village
Public Hearing held on _____ 20____ Please check one: ☐ Approved ☐ Disapproved
Signature of City/County Official: _____ Title: _____

Alcoholic Beverage Control Division Use Only: ☐ Approved ☐ Disapproved
Signed by Director: _____ Date: _____

RECEIVED
DEC 13 2022
ALCOHOLIC BEVERAGE CONTROL

Premises Location, Ownership, and Description | NMSA §60-6B-10 | Page 2

1. The land and building which is proposed to be the licensed premises is: **(check one)**

☐ Owned by Applicant, copy of deed/document attached

☑ Leased by Applicant, copy of lease/document attached

☐ Other (provide details): _____

2. If the land and building are not owned by Applicant, indicate the following:

A. Owner(s): **Richard L. Miranda**

B. Date and Term of Lease: **August 29, 2022 1 year term expires August 31, 2023**

3. Premises location is Zoned (example C-1, see Zoning Statement): _____

Zoning Statement attached, ☐**Yes** ☑**No** Must be obtained from the Local Government, listing the proposed location by address, Type of Zone, state whether alcoholic beverages are allowed at proposed location, and if applicable, whether packaged sales, patio service and/or manufacturing is allowable. If there is no zoning in the proposed location, attach Statement from the local government, indicating there is no zoning.

4. Distance* from nearest Church: (Property line of church to closest point of licensed premises—shortest distance)

Name of Church: **St. Joseph Church** Miles/feet: **Approx. 18 Miles**

Address/location of Church: **NM Highway 152, Sierra Cuunty, NM (street address unknown)**

5. Distance* from nearest School: (Property line of school to closest point of licensed premises—shortest distance)

Name of School: **T or C Middle School** Miles/feet: **Approx. 26 miles**

Address/location of School: **Truth or Consequesces, NM**

6. Attach Detailed Floor Plan, must include the Total Square Footage of premises; List nearest cross street; Show which direction is North; Show each level (floor) where alcoholic beverages will be sold or consumed, exterior walls, doors, and interior walls; Patio Area with type of barrier used; Highlight Bonded Areas. The floor plan should be no larger than 8½ x 11 inches and must be labeled with designated areas highlighted, which will reflect the proposed Licensed Premises.

7. Type of Operation: ☐ Hotel ☑ Lounge ☐ Package Grocery ☐ Racetrack

☐ Restaurant ☐ Craft Distiller ☐ Small Brewer ☐ Winery ☐ Wholesaler

☐ Other (specify): _____

***NOTE**: If the distance is beyond 300 feet, but less than 400 feet, and the Applicant does not admit that the location is within 300 feet and requests a waiver from the LOD, a Registered Engineer or Licensed Surveyor must complete a Survey Certificate showing the exact distance.

NMRLD
NEW MEXICO REGULATION & LICENSING DEPARTMENT

RECEIVED
JAN 04 2023
ALCOHOL & GAMING DIVISION

STATE OF NEW MEXICO
MICHELLE LUJAN GRISHAM, GOVERNOR
Linda M. Trujillo, Superintendent
Andrew Vallejos, Director

PUBLIC COMMENT

We welcome public comments, either positive or negative, regarding liquor license applications. If you feel the approval of the liquor license would endanger or adversely affect your community, please provide all issues of concern. If you are in support of issuing the liquor license, please document that below.

Establishment/Applicant Name: R + W, LLC

Proposed Location: 1063 Broadway, Winston, NM 87943

In the City of: Winston, NM

Summarize your comment or concerns, attach addition pages if necessary:

As residents of Winston, we object to the issuing of this liquor license in our community. As can be seen from the inclosed pictures, no improvements have been made to this property in over 10 years, and there is little to no hope of it being a benefit in this town. this business will only deliver more of the same.

We may not stop this, but at ~~[illegible]~~ least we let it be known our feelings.

Your Name: James Springer Date: 12-29-22

Your Street Address: 528 Republic Rd

City: Winston State: NM Zip: 87943

How may we contact you?

Phone: 575-894-0394 E-mail: jimdspringer157@gmail.com

You may submit your comments or concerns on-line through the RLD website, or mail this form to Regulation & Licensing Department Attn: AGD, PO Box 25101, Santa Fe, NM 87504-5101.

Revised 2/8/2021

Page 2
Additional names of people objecting to the liquor liscense in Winston, NM

Name Diane M Springer Address 528 Republic Rd Winston, NM PH 575-894-0394
Name John Johnson Address 952 Grafton Rd PH 409 224-4201
Name Dianne Neely Address 952 Grafton Rd. PH 575-740-8495
Name TESSA LACK Address PO Box 143 WINSTON, NM 87943 PH 575-894-6018
Name Randy Lack Address P.O. Box 143 WINSTON NM PH 575-894-6018
Name _____ Address _____ PH _____
Name _____ Address _____ PH _____
Name _____ Address _____ PH _____
Name _____ Address _____ PH _____
Name _____ Address _____ PH _____
Name _____ Address _____ PH _____
Name _____ Address _____ PH _____
Name _____ Address _____ PH _____
Name _____ Address _____ PH _____
Name _____ Address _____ PH _____
Name _____ Address _____ PH _____
Name _____ Address _____ PH _____
Name _____ Address _____ PH _____
Name _____ Address _____ PH _____

Winston Patrol Yard
Google Earth
Imagery date: 5/21/13 – ...
20 m
Camera: 1,965 m 33°20'44"N 107°38'51"W ...

Front
BAR
SALOON

S.E Corner
Front

Rear

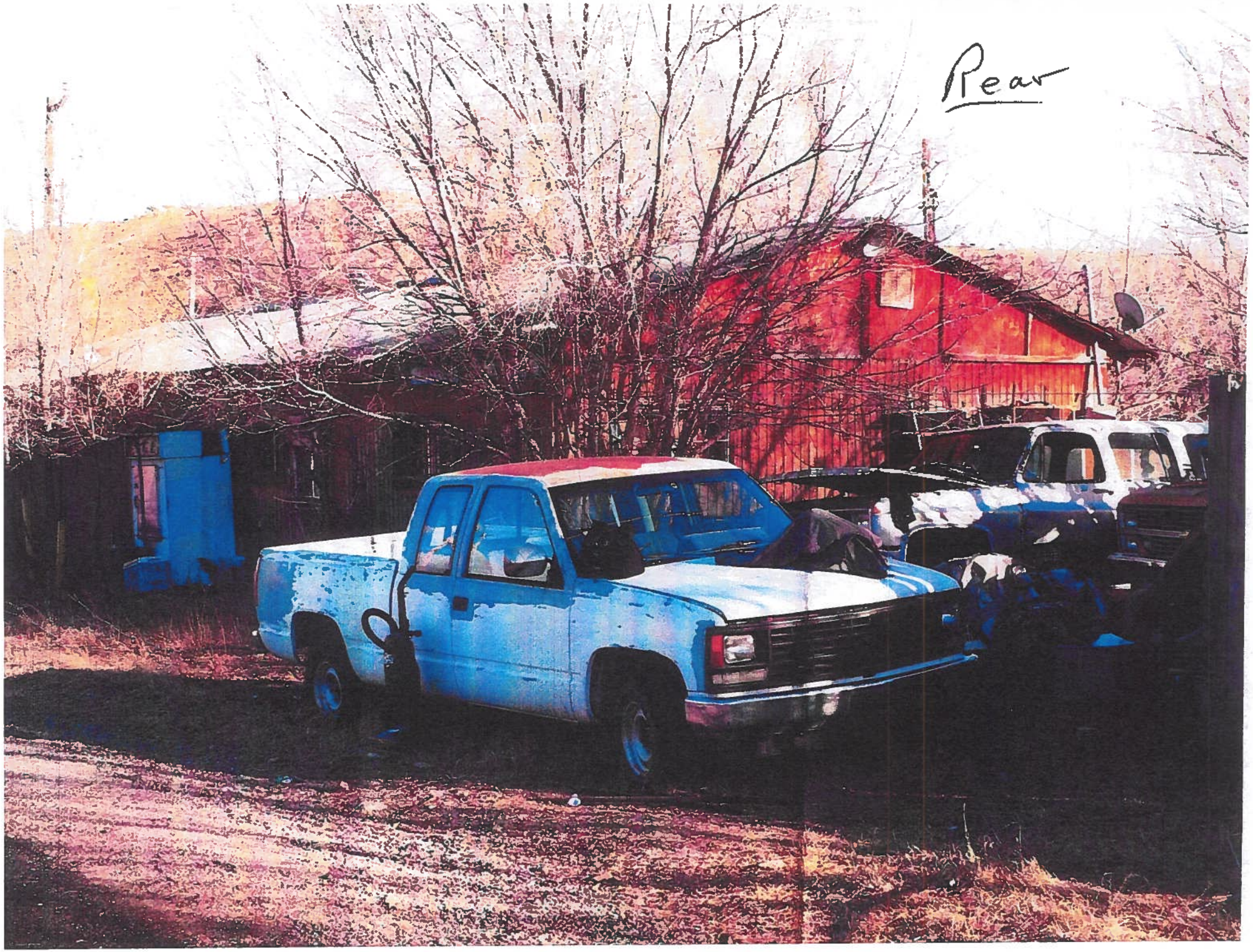
Rear

State of New Mexico

Shelly Trujillo
County Clerk
575-894-2840

Candace Chavez
County Treasurer
575-894-3524

Michael Huston
County Assessor
575-894-2589

Tom Pestak
Probate Judge
575-740-4900

SIERRA COUNTY
NEW MEXICO

Amber Vaughn
County Manager
1712 N. Date Street Suite D
Truth or Consequences, New Mexico 87901

County of Sierra

Travis Day
Commission Chair
575-894-6215

James E. Paxon
Vice- Chair
575-894-6215

Hank Hopkins
Commissioner
575-894-6215

Joshua Baker
Sheriff
575-894-9150

AGREEMENT BETWEEN MATHEW 25
AND THE COUNTY OF SIERRA

March 15, 2023

Dear Commissioners:

RE: MATHEW 25 FOOD PANTRY

The County is in the process of updating, the expired agreement, with the Mathew 25 food services program. The updated agreement, we will allow the County to continue assisting the program and community, who are in need of support to provide meals.

This is a budgeted program and is in this current fiscal year. I would like to request the approval of the said agreement to provide the funding this term and move forward to budgeting for the next three fiscal years.

Please, see attached documentations and approved.

FUND 419-13 SPECIAL PROJECTS

Total Cost $2,500.00 ANNUALY

Respectively,

Jocelyn Holguin
Chief Procurement Officer

SIERRA COUNTY

CONTRACT #2023-02-018
MATHEW 25 Food Pantry

THIS AGREEMENT is made and entered into by and between the County of Sierra, on behalf of the Sierra County and Highland Enterprises, Inc., hereinafter referred to as the "County," and "Mathew 25 Food Pantry", hereinafter referred to as the "Contractor", and is effective as of the date set forth below upon which it is executed by the Chief Procurement Officer and the Board of County Commissioners.

IT IS AGREED BETWEEN THE PARTIES:

1. Scope of Work.

- Provide food for the County Residents suffering from food insecurity, i.e., indigent and/or disabled; and
- At the request of Law Enforcement and fire personnel, provide food to flood and fire victims, victims of domestic violence and the homeless
- The County Commission will approve request and will be budgeted for each fiscal year of this agreement

2. Compensation.

A. The County shall pay to the Contractor in full payment for services satisfactorily performed at the rate **$2500.00**, Two-Thousand Five Hundred Dollars and Zero cents, inclusive of New Mexico GRT.

B. Payment is subject to availability of funds pursuant to the Appropriations Paragraph set forth below and to any negotiations between the parties from year to year pursuant to Paragraph 1, Scope of Work. All invoices MUST BE received by the County no later than fifteen (15) days after the termination of the Fiscal Year in which the services were delivered. Invoices received after such date WILL NOT BE PAID.

C. Contractor must submit an invoice for services completed. If payment is made by mail, the payment shall be deemed tendered on the date it is postmarked. However, the County shall not incur late charges, interest, or penalties for failure to make payment within the time specified herein.

D. The payment of taxes due for any money received under this Agreement shall be the Contractor's sole responsibility and shall be reported under the Contractor's Federal and State tax identification number(s).

FILE COPY

3. Term.

This Agreement shall terminate on year from the date of execution, unless terminated pursuant to paragraph 4 (Termination), or paragraph 5 (Appropriations). This Contract will automatically renew on an annual basis, for up to three (3) additional one (1) year terms unless terminated as provided by the resultant contract or law. In accordance with Section 13-1-150 NMSA 1978, no contract term for a professional services contract, including extensions and renewals, shall exceed four years, except as set forth in Section 13-1-150 NMSA 1978.

4. Termination.

A. Termination. This Agreement may be terminated by either of the parties hereto upon written notice delivered to the other party at least thirty (30) days prior to the intended date of termination. Except as otherwise allowed or provided under this Agreement, the County's sole liability upon such termination shall be to pay for acceptable work performed prior to the Contractor's receipt of the notice of termination, if the County is the terminating party, or the Contractor's sending of the notice of termination, if the Contractor is the terminating party; provided, however, that a notice of termination shall not nullify or otherwise affect either party's liability for pre-termination defaults under or breaches of this Agreement. The Contractor shall submit an invoice for such work within thirty (30) days of receiving or sending the notice of termination. Notwithstanding the foregoing, this Agreement may be terminated immediately upon written notice to the Contractor if the Contractor becomes unable to perform the services contracted for, as determined by the County or if, during the term of this Agreement, the Contractor or any of its officers, employees or agents is indicted for fraud, embezzlement or other crime due to misuse of government funds or due to the Appropriations paragraph herein. THIS PROVISION IS NOT EXCLUSIVE AND DOES NOT WAIVE THE STATE'S OTHER LEGAL RIGHTS AND REMEDIES CAUSED BY THE CONTRACTOR'S DEFAULT/BREACH OF THIS AGREEMENT.

B Termination Management. Immediately upon receipt by either the County or the Contractor of notice of termination of this Agreement, the Contractor shall: 1) not incur any further obligations for salaries, services or any other expenditure of funds under this Agreement without written approval of the County; 2) comply with all directives issued by the County in the notice of termination as to the performance of work under this Agreement; and 3) take such action as the County shall direct for the protection, preservation, retention or transfer of all property titled to the County and records generated under this Agreement. Any non-expendable personal property or equipment provided to or purchased by the Contractor with contract funds shall become property of the County upon termination and shall be submitted to the County as soon as practicable.

5. Appropriations.

The terms of this Agreement are contingent upon sufficient appropriations and authorization being made by the Board of County Commissioners for the performance of this Agreement. If sufficient appropriations and authorization are not made by the Board of County Commissioners, this Agreement shall terminate immediately upon written notice being given by the County to the Contractor. The County's decision as to whether sufficient appropriations are available shall be accepted by the Contractor and shall be final. If the County proposes an amendment to the Agreement to unilaterally reduce funding, the Contractor shall have the option

to terminate the Agreement or to agree to the reduced funding, within thirty (30) days of receipt of the proposed amendment.

6. Status of Contractor.

The Contractor and its agents and employees are independent contractors performing professional services for the County and are not employees of the County of Sierra. The Contractor and its agents and employees shall not accrue leave, retirement, insurance, bonding, use of county vehicles, or any other benefits afforded to employees of the County of Sierra as a result of this Agreement. The Contractor acknowledges that all sums received hereunder are reportable by the Contractor for tax purposes, including without limitation, self-employment and business income tax. The Contractor agrees not to purport to bind the County of Sierra unless the Contractor has express written authority to do so, and then only within the strict limits of that authority.

7. Assignment.

The Contractor shall not assign or transfer any interest in this Agreement or assign any claims for money due or to become due under this Agreement without the prior written approval of the County.

8. Subcontracting.

The Contractor shall not subcontract any portion of the services to be performed under this Agreement without the prior written approval of the County. No such subcontract shall relieve the primary Contractor from its obligations and liabilities under this Agreement, nor shall any subcontract obligate direct payment from the County. In all cases, the contractor is solely responsible for fulfillment of this Agreement.

9. Release.

Final payment of the amounts due under this Agreement shall operate as a release of the procuring agency of the County, its officers and employees, and the County of Sierra from all liabilities, claims and obligations whatsoever arising from or under this Agreement.

10. Confidentiality.

Any confidential information provided to or developed by the Contractor in the performance of this Agreement shall be kept confidential and shall not be made available to any individual or organization by the Contractor without the prior written approval of the County.

11. Product of Service -- Copyright.

All materials developed or acquired by the Contractor under this Agreement shall become the property of the County of Sierra and shall be delivered to the County no later than the termination date of this Agreement. Nothing developed or produced, in whole or in part, by the Contractor under this Agreement shall be the subject of an application for copyright or other claim of ownership by or on behalf of the Contractor.

12. Conflict of Interest; Governmental Conduct Act.

A. The Contractor represents and warrants that it presently has no interest and, during the term of this Agreement, shall not acquire any interest, direct or indirect, which would conflict in any manner or degree with the performance or services required under the Agreement.

B. The Contractor further represents and warrants that it has complied with, and, during the term of this Agreement, will continue to comply with, and that this Agreement complies with all applicable provisions of the Governmental Conduct Act, Chapter 10, Article 16 NMSA 1978. Without in anyway limiting the generality of the foregoing, the Contractor specifically represents and warrants that:

1) in accordance with Section 10-16-4.3 NMSA 1978, the Contractor does not employ, has not employed, and will not employ during the term of this Agreement any County employee while such employee was or is employed by the County and participating directly or indirectly in the County's contracting process;

2) this Agreement complies with Section 10-16-7(B) NMSA 1978 because (i) the Contractor is not a public officer or employee of the County; (ii) the Contractor is not a member of the family of a public officer or employee of the County; (iii) the Contractor is not a business in which a public officer or employee or the family of a public officer or employee has a substantial interest; or (iv) if the Contractor is a public officer or employee of the County, a member of the family of a public officer or employee of the County, or a business in which a public officer or employee of the County or the family of a public officer or employee of the County has a substantial interest, public notice was given as required by Section 10-16-7(B) NMSA 1978 and this Agreement was awarded pursuant to a competitive process;

3) in accordance with Section 10-16-8(C) NMSA 1978, (i) the Contractor is not, and has not been represented by, a person who has been a public officer or employee of the County within the preceding year and whose official act directly resulted in this Agreement and (ii) the Contractor is not, and has not been assisted in any way regarding this transaction by, a former public officer or employee of the County whose official act, while in County employment, directly resulted in the County's making this Agreement;

4) in accordance with Section 10-16-13 NMSA 1978, the Contractor has not directly participated in the preparation of specifications, qualifications or evaluation criteria for this Agreement or any procurement related to this Agreement; and

5) in accordance with Section 10-16-3 and Section 10-16-13.3 NMSA 1978, the Contractor has not contributed, and during the term of this Agreement shall not contribute, anything of value to a public officer or employee of the County.

C. Contractor's representations and warranties in Paragraphs A and B of this Article 12 are material representations of fact upon which the County relied when this Agreement was entered into by the parties. Contractor shall provide immediate written notice to the County if, at any time during the term of this Agreement, Contractor learns that Contractor's representations and warranties in Paragraphs A and B of this Article 12 were erroneous on the effective date of this Agreement or have become erroneous by reason of new or changed circumstances. If it is later determined that Contractor's representations and warranties in Paragraphs A and B of this Article 12 were erroneous on the effective date of this Agreement or have become erroneous by reason of new or changed circumstances, in addition to other remedies available to the County and

notwithstanding anything in the Agreement to the contrary, the County may immediately terminate the Agreement.

D. All terms defined in the Governmental Conduct Act have the same meaning in this Article 12(B).

13. Amendment.

A. This Agreement shall not be altered, changed or amended except by instrument in writing executed by the parties hereto and all other required signatories.

B. If the County proposes an amendment to the Agreement to unilaterally reduce funding due to budget or other considerations, the Contractor shall, within thirty (30) days of receipt of the proposed Amendment, have the option to terminate the Agreement, pursuant to the termination provisions as set forth in Article 4 herein, or to agree to the reduced funding.

14. Merger.

This Agreement incorporates all the Agreements, covenants and understandings between the parties hereto concerning the subject matter hereof, and all such covenants, Agreements and understandings have been merged into this written Agreement. No prior Agreement or understanding, oral or otherwise, of the parties or their agents shall be valid or enforceable unless embodied in this Agreement.

15. Penalties for violation of law.

The Procurement Code, Sections 13-1-28 through 13-1-199, NMSA 1978, imposes civil and criminal penalties for its violation. In addition, the New Mexico criminal statutes impose felony penalties for illegal bribes, gratuities and kickbacks.

16. Equal Opportunity Compliance.

The Contractor agrees to abide by all federal, state and county laws and rules and regulations, pertaining to equal employment opportunity. In accordance with all such laws, the Contractor assures that no person in the United States shall, on the grounds of race, religion, color, national origin, ancestry, sex, age, physical or mental handicap, or serious medical condition, spousal affiliation, sexual orientation or gender identity, be excluded from employment with or participation in, be denied the benefits of, or be otherwise subjected to discrimination under any program or activity performed under this Agreement. If Contractor is found not to be in compliance with these requirements during the life of this Agreement, Contractor agrees to take appropriate steps to correct these deficiencies.

17. Applicable Law.

The laws of the State of New Mexico shall govern this Agreement and shall be enforceable in the Thirteenth Judicial District Court in Sierra County. By execution of this Agreement, Contractor acknowledges and agrees to the jurisdiction of the courts of the State of New Mexico over any and all lawsuits arising under or out of any term of this Agreement.

18. Workers Compensation.

The Contractor agrees to comply with state laws and rules applicable to workers compensation benefits for its employees. If the Contractor fails to comply with the Workers Compensation Act and applicable rules when required to do so, this Agreement may be terminated by the County.

19. Records and Financial Audit.

The Contractor shall maintain detailed time and expenditure records that indicate the date; time, nature and cost of services rendered during the Agreement's term and effect and retain them for a period of three (3) years from the date of final payment under this Agreement. The records shall be subject to inspection by the County, the Department of Finance and Administration and the State Auditor. The County shall have the right to audit billings both before and after payment. Payment under this Agreement shall not foreclose the right of the County to recover excessive or illegal payments

20. Disclaimer and Hold Harmless.

The County shall not be liable to the Contractor, or the Contractor's successors, heirs, administrators, or assigns, for any loss, damage, or injury, whether to Contractor's person or property, occurring in connection with Contractor's performance of Contractor's duties according to this Agreement. Contractor shall hold the Sierra County harmless from all loss, damage, and injury, including court costs and attorney fees, incurred by Sierra County in connection with the performance by Contractor of Contractor's duties according to this Agreement.

21. Indemnification.

The Contractor shall defend, indemnify and hold harmless the County of Sierra from all actions, proceeding, claims, demands, costs, damages, attorneys' fees and all other liabilities and expenses of any kind from any source which may arise out of the performance of this Agreement, caused by the negligent act or failure to act of the Contractor, its officers, employees, servants, subcontractors or agents, or if caused by the actions of any client of the Contractor resulting in injury or damage to persons or property during the time when the Contractor or any officer, agent, employee, servant or subcontractor thereof has or is performing services pursuant to this Agreement. In the event that any action, suit or proceeding related to the services performed by the Contractor or any officer, agent, employee, servant or subcontractor under this Agreement is brought against the Contractor, the Contractor shall, as soon as practicable but no later than two (2) days after it receives notice thereof, notify the legal counsel of the County of Sierra and the New Mexico Association of Counties by certified mail.

22. Invalid Term or Condition.

If any term or condition of this Agreement shall be held invalid or unenforceable, the remainder of this Agreement shall not be affected and shall be valid and enforceable.

23. Enforcement of Agreement.

A party's failure to require strict performance of any provision of this Agreement shall not waive or diminish that party's right thereafter to demand strict compliance with that or any other provision. No waiver by a party of any of its rights under this Agreement shall be effective unless

express and in writing, and no effective waiver by a party of any of its rights shall be effective to waive any other rights.

24. Authority.

If Contractor is other than a natural person, the individual(s) signing this Agreement on behalf of Contractor represents and warrants that he or she has the power and authority to bind Contractor, and that no further action, resolution, or approval from Contractor is necessary to enter into a binding contract.

25. Approval of Contractor Personnel.

Personnel proposed in the Contractor's written proposal to the County are considered material to any work performed under this Agreement. No changes of personnel will be made by the Contractor without prior written consent of the procuring agency of the County. Replacement of any Contractor personnel, if approved, shall be with personnel of equal ability, experience and qualifications. The Contractor will be responsible for any expenses incurred in familiarizing the replacement personnel to insure their being productive to the project immediately upon receiving assignments. Approval of replacement personnel shall not be unreasonably withheld. The procuring agency of the County shall retain the right to request the removal of any of the Contractor's personnel at any time.

26. Survival.

The agreement paragraph titled "Indemnification shall survive the expiration of this agreement.

27. Succession.

This agreement shall extend to and be binding upon the successors and assigns of the parties.

28. Force Majeure.

A party shall be excused from performance under this agreement for any period that the party is prevented from performing as a result of an act of God, strike, war, civil disturbance, epidemic, or court order, provided that the party has prudently and promptly acted to take any and all steps that are within the party's control to ensure performance. Subject to this provision, such non-performance shall not be deemed a default or a ground for termination.

29. Mediation.

In the event a dispute arises as to the rights and obligations among the parties hereto, the parties agree to attempt to resolve the dispute through mediation as a condition precedent to seeking legal and equitable remedies. The parties agree to evenly split the costs of any such mediation services. The parties shall mutually agree upon the choice of mediator. In the event the parties have not agreed upon a mediator within twenty (20) days of written notice to the other regarding the dispute, then a list of seven potential mediators will be obtained from the New Mexico Counties and the parties shall utilize a striking process until a mediator is agreed upon.

30. Notice to Proceed.

It is expressly understood that this Agreement is not binding upon the County until it is executed by the Board of County Commissioners after voting on the contract at a public meeting or unless it is executed by the Sierra County Manager, if the amount of the contract is $20,000.00 or less, further, that the Contractor is not to proceed with its obligations under the Agreement until the Contractor has received a fully signed copy of the Agreement.

31. Attorney's Fees.

In the event this Agreement results in dispute, mediation, litigation, or settlement between the parties to this Agreement, the prevailing party of such action shall NOT be entitled to an award of attorneys' fees and court costs.

32. Cooperation.

All parties hereto will fully cooperate with the other and their respective counsel, accountant, and agents in connection with any steps required to be taken under this Agreement.

33. Incorporation and Order of Precedence.

the event of any conflict among contract documents, the following order of precedence shall apply:

1. Any contract amendment(s), in reverse chronological order; then
2. this contract itself.

34. **Notices.**

Any notice required to be given to either party by this Agreement shall be in writing and shall be delivered in person, by courier service or by U.S. mail, either first class or certified, return receipt requested, postage prepaid, as follows:

To County of Sierra:

Jocelyn Holguin, Chief Procurement Officer
1712 North Date Street Suite D
Truth or Consequences, NM 87901

To the Contractor:

Mathew 25
405 Austin Street
Truth or Consequences, NM 87901

Contact # 480-267-3535

By: Harry Nordgren
Harry Nordgren, Director

Date: 8 March, 2023

IN WITNESS WHEREOF, the parties have executed this Agreement as of the date of signature by the County Chief Procurement Officer below:

By: _____ Date: _____
Amber Vaughn, County Manager

BOARD OF COUNTY COMMISSIONERS

APPROVED, ADOPTED AND PASSED on this 21st day of March, 2023.

_____

_____
Travis Day, Chair

_____
James E. Paxon, Vice- Chair

_____
Hank Hopkins, Commissioner

Attest:

_____
Shelly Trujillo
Sierra County Clerk

Sierra County Chief Procurement Officer:

By: _____ Date: _____

Jocelyn Holguin, CPO
Sierra County

State of New Mexico

Shelly Trujillo
County Clerk
575-894-2840

Candace Chavez
County Treasurer
575-894-3524

Michael Huston
County Assessor
575-894-2589

Tom Pestak
Probate Judge
575-740-4900

SIERRA COUNTY
NEW MEXICO

Amber Vaughn
County Manager
1712 N. Date Street Suite D
Truth or Consequences, New Mexico 87901

County of Sierra

Travis Day
Commission Chair
575-894-6215

James E. Paxon
Vice- Chair
575-894-6215

Hank Hopkins
Commissioner
575-894-6215

Joshua Baker
Sheriff
575-894-9150

LEASE AGREEMENT BETWEEN THE
SIERRA COUNTY FLOOD COMMISSION & CITY OF T OR C

March 15, 2023

Dear Commissioners:

RE: LEASE AGREEMENT-FLOOD COMMISSION/CITY CIVIC CENTER

The County Flood Commission, has located space for governmental business at, 400 West 4th Avenue, Truth or Consequences, NM 87901. Here is where Mr. Jones will be conducting Flood business for the next several years. This location is a City owned building and have provided the space.

As we are the fiscal agents for the flood funds, this has been placed on the agenda for formal approval through our County Commissioners.

Please, see attached documentations and approved.

FLOOD FUND 627-26

ANNUAL COST $4,800.00 /MONTY $400.00

TERM COST $19,200.00

Respectively,

Jocelyn Holguin
Chief Procurement Officer

FILE COPY

CITY OF TRUTH OR CONSEQUENCES
CIVIC CENTER
CONTRACT #2023-03-039
TENANT LEASE AGREEMENT

THIS TENANT LEASE AGREEMENT (Agreement) is made between **THE CITY OF TRUTH OR CONSEQUENCES (City), and SANDY JONES, in his capacity as the SIERRA COUNTY FLOOD COMMISSIONER (Lessee).**

WHEREAS, the parties agree as follows:

1. **Property Leased:**

In consideration of the conditions and covenants herein, Lessor leases the following described property (Premises) at the Truth or Consequences Civic Center:

> A Five Hundred (500) Foot office space located at the Truth or Consequences Civic Center, 400 West 4th Avenue, Truth Or Consequences, New Mexico 87901.

2. **Term:**

This agreement shall be for a twelve (12) month term commencing on March 1, 2023 and shall expire on March 1, 2027 unless terminated sooner pursuant to Section 13, Right to Terminate, below. This Lease may be auto renewed for up to three (3) years upon the mutual consent of the parties.

3. **Rent:**

Lessor and Lessee acknowledge that Lessee shall pay Four Hundred Dollars ($400.00) per month. Payment will be due on the 15th day of each month, beginning on March 15, 2023. An approved invoice for payment shall be provided in advance for payment.

4. **Use of Leased Property:**

Lessee shall use the Premises for Governmental purposes only. Lessee shall not violate or tolerate or permit others to violate, federal, state, or applicable local criminal or civil laws, regulations, rules or ordinances, including Lessor's terms of this Agreement on the Premises. Any such violation shall be grounds for Lessor, in the sole exercise of its discretion, to terminate this Agreement immediately by giving written notice to Lessee at the address set forth below.

5. **Condition of Premises:**

Lessee hereby assumes any and all risks to Lessee, Lessee's invitees, or social guests that may result from any dangerous or unsafe conditions on the Premises.

FILE COPY

6. **Utilities:**

Lessee shall be responsible for providing phone and internet services on the leased premises.

7. **Alterations and Improvements:**

Lessee shall not make any alterations or improvements to the Premises without Lessor's prior written approval. All of Lessee's alterations and improvements made to or placed on the Premises that can be removed without undue damage to the Premises are, and shall remain, Lessee's property except as Lessor and Lessee mutually agree in writing. Lessee's alterations and improvements of a permanent nature that cannot be removed without undue damage to the Premises shall become Lessor's property, except as the parties mutually agree otherwise in writing.

8. **Condition of Premises on Termination of Lease:**

At this Agreement's termination, Lessee shall surrender the Premises in the condition in which they were at the inception of this Agreement, normal wear and tear considered, excepting alterations, improvements, or conditions made with Lessor's written approval and any change, damage, or destruction not resulting from Lessee's willful act.

9. **Right of Entry:**

Lessor or its agent has a right to enter upon the Premises to inspect, to make repairs and for other reasonable purposes, with Lessee's permission, which shall not be unreasonably withheld upon delivery of 24 hours written notice to Lessee. In an emergency, such as fire, Lessor or its agent may enter the Premises without securing Lessee's prior permission or the providing of 24 hour notice to Lessee, but shall give Lessee written notice of entry as soon thereafter as practicable.

10. **Duty to Maintain Premises:**

Lessor has the duty to maintain the Premises in a safe condition and in good repair.

11. **Right to Assign or Sublease:**

Lessee has no right to assign or sublease the rights to the Premises or any part of them pursuant to this Agreement to any other individual or entity.

12. **Liability:**

During the term of this Agreement and any extension thereof, each party shall be liable for its' own acts or failures to act in accordance with this Agreement, and subject to the immunities and limitations of the New Mexico Tort Claims Act, NMSA 1978, §§ 41-4-1 et seq., and the New Mexico Civil Rights Act, NMSA 1978, Sections 41-4a-1 et seq.

13. Right to Terminate:

Either Lessor or Lessee may declare this Agreement terminated for any reason or no reason at any time. Notice of Termination shall be in writing to the other party. Lessee shall surrender the Premises within Thirty (30) days of receipt of Notice of Termination.

14. Amendments:

This Agreement shall not be altered or amended except by an instrument in writing executed by the parties.

15. Contact Information:

Any notice provided for or concerning this Agreement shall be in writing and shall be sufficiently given when sent by certified or registered mail to the parties respective addresses, or at such other addresses as each party may provide to the other in writing. Lessor Contact: Bruce Swingle, City Manager, City of Truth or Consequences, 505 Sims Street, Truth or Consequences, New Mexico 87901, Telephone 575-894-6673. Lessee Contact: Sandy Jones, Flood Commissioner, 400 West 4th Avenue, Truth or Consequences, NM, 87901, Telephone:575-740-9918.

16. Applicable Law:

This Agreement shall be governed by the laws of the State of New Mexico.

IN WITNESS WHEREOF, the parties have executed this Agreement.

LESSOR:

By: _____ **Date:** _____
BRUCE SWINGLE, City Manager

LESSEE:

By: _____ **Date:** _____
SANDY JONES, Sierra County
Flood Commissioner

Notices.

Any notice required to be given to either party by this Agreement shall be in writing and shall be delivered in person, by courier service or by U.S. mail, either first class or certified, return receipt requested, postage prepaid, as follows:

To: County of Sierra

Jocelyn Holguin, Chief Procurement Officer
1712 N. Date Street Suite D
Truth or Consequences, NM 87901

As Fiscal Agents For:

Lease Agreement between the Sierra County Flood Commission and the City of T or C

IN WITNESS WHEREOF, the parties have executed this Agreement as of the date of signature by the County Chief Procurement Officer below:

By: _____ Date: _____
Amber Vaughn, County Manager

BOARD OF COUNTY COMMISSIONERS

APPROVED, ADOPTED AND PASSED on this 21st day of March 2023.

_____

_____
Travis Day, Commissioner Chair

_____
James E. Paxon, Vice- Chair

_____
Hank Hopkins, Commissioner

Attest:

_____
Shelly Trujillo
Sierra County Clerk

Sierra County Chief Procurement Officer:

By: _____ Date: _____
Jocelyn Holguin, CPO
Sierra County

State of New Mexico

Shelly Trujillo
County Clerk
575-894-2840

Candace Chavez
County Treasurer
575-894-3524

Michael Huston
County Assessor
575-894-2589

Tom Pestak
Probate Judge
575-740-4900

SIERRA COUNTY
NEW MEXICO

Amber Vaughn
County Manager
1712 N. Date Street Suite D
Truth or Consequences, New Mexico 87901

County of Sierra

Travis Day
Commission Chair
575-894-6215

James E. Paxon
Commission Visa Chair
575-894-6215

Hank Hopkins
Commissioner
575-894-6215

Joshua Baker
Sheriff
575-894-9150

CES AGREEMENT BETWEEN LONESTAR TRUCK GROUP AND THE COUNTY OF SIERRA

March 15, 2023

Dear Commissioners:

RE: 2023 NEW WESTERN STAR TRACTOR-CES

The County, with the remaining balance, from the received Appropriation #22-G3021 Fund 89200 Capital for road equipment and heavy equipment and with the assistance of the LACTF funds, the Road department has been able to locate the new tractor the department has been in need of.

Based on discussion with the County Manager and the Road Department, a determination was issued, to move forward with the direct purchase. We were able to utilize the **CES Agreement #2020-31B-C118-ALL**. Please see attached documentation.

I am requesting our County Commission to approve the purchase of the new truck and allow me to move forward with this procurement. Thank you.

Appropriation: 22-G3021 Remaining Balance $108,317.00
Local Assistance & Tribal Consistency Fund 512-50: $13,579.00
Total Balance: $234,996.00

Respectively,

Jocelyn Holguin
Chief Procurement Officer

FILE COPY

COUNTY OF SIERRA
SIERRA COUNTY ROAD DEPARTMENT
ATTENTION: DEPARTMENT
2501 SOUTH BROADWAY,
TRUTH OR CONSEQUENCES NM 87901

County Department: ROAD DEPARTMENT

Requester: JOCELYN-PURCHASING MNGR

Requisition Number: 6110 PO Number:

Vendor Number: 5537

Date: 3/15/23

REQUISITION

Price Each	Quantity	Line Item Number	Description of Item or Service	TOTAL
108317.00	1.00	502-56-2977	22-G3021 REMIANING BALANCE	108317.00
135679.00	1.00	512-50-2935	LACTF BALANCE	135679.00
			CES AGREEMENT	
			#2020-31B-C118-ALL	
			2023 NEW WESTERN STAR TRACTOR	
			COMMISSION AGENDA: 3/21/2023	
		COUNTY MANAGER	SEE ATTACED:	
		ELECTRONIC APPROVAL		
		DATE:		
			RECEIVED	
			MAR 15 2023	
			BY:	
			Total this Page	243996.00

LONESTAR FREIGHTLINER GROUP, LLC

Name Of Supplier

Notices.

Any notice required to be given to either party by this Agreement shall be in writing and shall be delivered in person, by courier service or by U.S. mail, either first class or certified, return receipt requested, postage prepaid, as follows:

To: County of Sierra

Jocelyn Holguin, Chief Procurement Officer
1712 N. Date Street Suite D
Truth or Consequences, NM 87901

To the Contractor:

LONESTAR TRUCK GROUP
12901 I-40 West Frontage Rd
Albuquerque, NM 87121

Phone: 505.833.1000

Contact Person: Pat Torres

CES-#2020-31B-C118-ALL

IN WITNESS WHEREOF, the parties have executed this Agreement as of the date of signature by the County Chief Procurement Officer below:

By: _____ Date: _____
Amber Vaughn, County Manager

BOARD OF COUNTY COMMISSIONERS

APPROVED, ADOPTED AND PASSED on this 21st day of March 2023.

_____

_____
Travis Day, Commissioner Chair

_____
James E. Paxon, Vice- Chair

_____
Hank Hopkins, Commissioner

Attest:

_____
Shelly Trujillo
Sierra County Clerk

Sierra County Chief Procurement Officer:

By: _____ Date: _____
Jocelyn Holguin, CPO
Sierra County

Prepared by:
Pat Torres
LONESTAR TRUCK GROUP ALBUQUERQUE
12901 I-40 WEST FRONTAGE ROAD
ALBUQUERQUE, NM 87121
Phone: 505-833-1000

A proposal for
NEW MEXICO DOT AND ALL POLITICAL SUB DIVISIONS

Prepared by
LONESTAR TRUCK GROUP ALBUQUERQUE
Pat Torres

Mar 03, 2023

Western Star 57X

Components shown may not reflect all spec'd options and are not to scale

Application Version 11.7.705
Data Version PRL-27B 021
57X WesternStar Tractor Transport Tractor

RECEIVED
MAR 14 2023
BY:

Prepared by:
Pat Torres
LONESTAR TRUCK GROUP ALBUQUERQUE
12901 I-40 WEST FRONTAGE ROAD
ALBUQUERQUE, NM 87121
Phone: 505-833-1000

Hi Billy,

I appreciate the opportunity in allowing me to be able to quote you on a New Western Star Tractor!
Please review the specs and let me know if I need to make any changes. Thank You I appreciate it Billy!

Respectfully,,

Pat Torres

Prepared by:
Pat Torres
LONESTAR TRUCK GROUP
ALBUQUERQUE
12901 I-40 WEST FRONTAGE
ROAD
ALBUQUERQUE, NM 87121
Phone: 505-833-1000

S P E C ' D A L T E R N A T I V E S

THIS QUOTE IS BASED OFF OF THE CES CONTRACT!!!
CONTRACT # 2020-31B-C118-ALL!!!

Prepared by:
Pat Torres
LONESTAR TRUCK GROUP
ALBUQUERQUE
12901 I-40 WEST FRONTAGE
ROAD
ALBUQUERQUE, NM 87121
Phone: 505-833-1000

S P E C I F I C A T I O N P R O P O S A L

Data Code	Description	Weight Front	Weight Rear	Retail Price
Price Level				
PRL-27B	WST 57X PRL-27B (EFF:MY24 ORDERS)			STD
Data Version				
DRL-021	SPECPRO21 DATA RELEASE VER 021			STD
Vehicle Configuration				
001-473	WESTERN STAR 57X	9,770	7,770	$243,996.00
004-224	2024 MODEL YEAR SPECIFIED			STD
002-002	SET BACK AXLE - TRACTOR			STD
019-005	TRAILER TOWING PROVISION FORWARD OF FIFTH WHEEL			STD
003-001	LH PRIMARY STEERING LOCATION			STD
General Service				
AA1-001	TRACTOR/TRAILER CONFIGURATION			STD
AA6-001	DOMICILED, USA 50 STATES (INCLUDING CALIFORNIA AND CARB OPT-IN STATES)			STD
A65-002	PICKUP AND DELIVERY/SHORT HAUL SERVICE			N/C
AB4-1GM	GOVERNMENT BUSINESS SEGMENT			N/C
AA4-006	HEAVY EQUIPMENT COMMODITY			N/C
AA5-006	TERRAIN/DUTY: 10% (SOME) OF THE TIME, IN TRANSIT, IS SPENT ON NON-PAVED ROADS			N/C
AB1-008	MAXIMUM 8% EXPECTED GRADE			STD
AB5-003	MAINTAINED GRAVEL OR CRUSHED ROCK - MOST SEVERE IN-TRANSIT (BETWEEN SITES) ROAD SURFACE			N/C
995-1A5	WESTERN STAR VOCATIONAL WARRANTY			N/C
A66-99D	EXPECTED FRONT AXLE(S) LOAD : 13300.0 lbs			
A68-99D	EXPECTED REAR DRIVE AXLE(S) LOAD : 40000.0 lbs			
A63-99D	EXPECTED GROSS VEHICLE WEIGHT CAPACITY : 53300.0 lbs			

PURCHASE ORDER #

_____

RECEIVED
MAR 14 2023
BY: _____

Prepared by:
Pat Torres
LONESTAR TRUCK GROUP
ALBUQUERQUE
12901 I-40 WEST FRONTAGE
ROAD
ALBUQUERQUE, NM 87121
Phone: 505-833-1000

Data Code	Description	Weight Front	Weight Rear	Retail Price
A70-99D	EXPECTED GROSS COMBINATION WEIGHT : 80000 0 lbs			
Truck Service				
AF3-2CR	TRACTOR ONLY WITH NO BODY UPFIT			N/C
Tractor Service				
AA2-009	LOWBOY TRAILER			N/C
AH6-001	SINGLE (1) TRAILER			STD
Engine				
101-28M	DETROIT DD15 GEN 5 HIGH POWER 14.8L 505 HP @ 1625 RPM, 1900 GOV RPM, 1650 LB-FT @ 975 RPM			$1,581.00
Electronic Parameters				
79A-080	80 MPH ROAD SPEED LIMIT			N/C
79E-004	LIMIT TO ENGINE RATING MINUS 100 LB-FT IN ALL GEARS EXCEPT TOP 2			N/C
79F-013	FLEET MANAGEMENT - DAILY ENGINE USAGE ENABLED			N/C
79G-005	5 MINUTES IDLE SHUTDOWN WITHOUT CLUTCH AND SERVICE BRAKE OVERRIDE			N/C
79P-032	PTO RPM CONTROL WITH STEERING WHEEL SWITCHES			N/C
79T-001	PTO MODE RPM INCREMENT - 25 RPM			N/C
79U-001	PTO GOVERNOR RAMP RATE - 25 RPM PER SECOND			N/C
79W-011	THREE CLUSTER SELECTABLE PTO GOVERNOR ENGINE SPEED PARAMETER			N/C
79X-001	PTO SPEED 1 SETTING - 700 RPM			N/C
79Y-001	PTO SPEED 2 SETTING - 900 RPM			N/C
79Z-016	PTO SPEED 3 SETTING - 1100 RPM			N/C
80G-001	PTO MINIMUM RPM - 600			N/C
80L-001	ENABLE AUTO ENGINE RPM ELEVATE FOR EXTENDED IDLE			N/C
80W-003	MAINTENANCE SYSTEM WITH MENU AND POP-UPS IN INSTRUMENT CLUSTER			STD
Engine Equipment				
99C-021	2010 EPA/CARB/GHG21 CONFIGURATION			STD
99D-011	2008 CARB EMISSION CERTIFICATION - CLEAN IDLE (INCLUDES 6X4 INCH LABEL ON LOWER FORWARD CORNER OF DRIVER DOOR)			STD

Prepared by:
Pat Torres
LONESTAR TRUCK GROUP
ALBUQUERQUE
12901 I-40 WEST FRONTAGE
ROAD
ALBUQUERQUE, NM 87121
Phone: 505-833-1000

Data Code	Description	Weight Front	Weight Rear	Retail Price
13E-001	STANDARD OIL PAN			STD
105-001	ENGINE MOUNTED OIL CHECK AND FILL			STD
014-1CT	DUAL SIDE OF HOOD AIR INTAKE WITH ENGINE MOUNTED AIR CLEANER			STD
124-105	LN 12V 170 AMP AVI 160 PAD MOUNT ALTERNATOR			STD
292-214	(4) DTNA GENUINE. FLOODED STARTING AND CYCLING, MIN 2800CCA, 760RC, THREADED STUD BATTERIES			STD
290-1B9	BATTERY BOX WITH ALUMINUM COVER MOUNTED LONG SIDE TO RAIL	-50	10	$463.00
282-003	SINGLE BATTERY BOX FRAME MOUNTED LH SIDE BACK OF CAB			N/C
291-017	WIRE GROUND RETURN FOR BATTERY CABLES WITH ADDITIONAL FRAME GROUND RETURN			STD
289-022	POLISHED ALUMINUM DIAMOND PLATE WST BATTERY BOX COVER			$107.00
293-058	POSITIVE LOAD DISCONNECT WITH CAB MOUNTED CONTROL SWITCH MOUNTED OUTBOARD DRIVER SEAT	2		$261.00
295-029	POSITIVE AND NEGATIVE POSTS FOR JUMPSTART LOCATED ON FRAME NEXT TO STARTER	2		$118.00
306-015	PROGRESSIVE LOW VOLTAGE DISCONNECT AT 12.3 VOLTS FOR DESIGNATED CIRCUITS			STD
107-046	BW MODEL FE-921 19.0 CFM SINGLE CYLINDER AIR COMPRESSOR WITH SAFETY VALVE			STD
152-041	ELECTRONIC ENGINE INTEGRAL SHUTDOWN PROTECTION SYSTEM			STD
128-002	JACOBS COMPRESSION BRAKE			STD
016-1F3	RH OUTBOARD UNDER STEP MOUNTED HORIZONTAL AFTERTREATMENT SYSTEM ASSEMBLY WITH RH FRAME MOUNTED VERTICAL TAILPIPE (ROUTED OUTSIDE/ABOVE RAIL)	40	40	$878.00
28F-015	ENGINE AFTERTREATMENT DEVICE, AUTOMATIC OVER THE ROAD ACTIVE REGENERATION AND VIRTUAL REGENERATION REQUEST SWITCH IN CLUSTER AND DASH MOUNTED INHIBIT SWITCH			STD
239-026	10 FOOT 06 INCH (126 INCH+0/-5.9 INCH) EXHAUST SYSTEM HEIGHT			($4.00)
233-017	STANDARD CURVE BRIGHT UPPER STACK(S)			$122.00
237-1CF	RH CURVED VERTICAL TAILPIPE BACK OF CAB FRAME MOUNTED ROUTED OVER FRAME			N/C

Prepared by:
Pat Torres
LONESTAR TRUCK GROUP
ALBUQUERQUE
12901 I-40 WEST FRONTAGE
ROAD
ALBUQUERQUE, NM 87121
Phone: 505-833-1000

Data Code	Description	Weight Front	Weight Rear	Retail Price
23U-002	13 GALLON DIESEL EXHAUST FLUID TANK	-10	-5	($70.00)
30N-003	100 PERCENT DIESEL EXHAUST FLUID FILL			STD
43X-001	LH HEAVY DUTY STANDARD DIESEL EXHAUST FLUID TANK LOCATION			STD
43Y-005	STANDARD DEF TANK CAP IN CENTER PANEL CUTOUT			STD
242-001	STAINLESS STEEL AFTERTREATMENT DEVICE/MUFFLER/TAILPIPE SHIELD			N/C
273-058	AIR POWERED ON/OFF ENGINE FAN CLUTCH			STD
276-002	AUTOMATIC FAN CONTROL WITH DASH SWITCH AND INDICATOR LIGHT. NON ENGINE MOUNTED			$10.00
122-1H1	DETROIT FUEL/WATER SEPARATOR WITH BYPASS	10		$318.00
110-068	DDC SUPPLIED ENGINE MOUNTED FUEL FILTER/FUEL WATER SEPARATOR WITH WATER-IN-FUEL INDICATOR			STD
118-001	FULL FLOW OIL FILTER			STD
286-1C1	1400 SQUARE INCH FUEL ECONOMY RADIATOR			STD
103-039	ANTIFREEZE TO -34F, OAT (NITRITE AND SILICATE FREE) EXTENDED LIFE COOLANT			STD
171-007	GATES BLUE STRIPE COOLANT HOSES OR EQUIVALENT			STD
172-001	CONSTANT TENSION HOSE CLAMPS FOR COOLANT HOSES			STD
270-023	HDEP FIXED RATIO COOLANT PUMP AND RADIATOR DRAIN VALVE			STD
168-002	LOWER RADIATOR GUARD			STD
138-005	PHILLIPS-TEMRO 1500 WATT/115 VOLT BLOCK HEATER	4		$30.00
140-022	CHROME ENGINE HEATER RECEPTACLE MOUNTED UNDER LH DOOR			$80.00
155-075	MITSUBISHI 12V MOD 3.175-DP80 STARTER WITH INTEGRATED MAGNETIC SWITCH			STD
Transmission				
342-1BO	EATON FULLER RTLO-16918B TRANSMISSION	80	40	($896.00)
Transmission Equipment				
353-073	QUICKFIT BODY LIGHTING CONNECTOR UNDER CAB, WITH CAP			$125.00
180-100	EATON ADVANTAGE 15-1/2 INCH SELF ADJUSTING CLUTCH	-50		N/C
183-008	TORQUE LIMITING CLUTCH BRAKE			N/C

Prepared by:
Pat Torres
LONESTAR TRUCK GROUP
ALBUQUERQUE
12901 I-40 WEST FRONTAGE
ROAD
ALBUQUERQUE, NM 87121
Phone: 505-833-1000

Data Code	Description	Weight Front	Weight Rear	Retail Price
181-002	ZERK FITTING WITH EXTENSION HOSE AT CLUTCH RELEASE BEARING			N/C
182-005	HYDRAULIC CLUTCH CONTROL			N/C
347-002	ALUMINUM CLUTCH HOUSING			STD
362-1T6	CUSTOMER INSTALLED CHELSEA 489 SERIES PTO			N/C
363-003	PTO MOUNTING, BOTTOM OF MAIN TRANSMISSION DETROIT & EATON FULLER TRANSMISSION			$25.00
341-018	MAGNETIC PLUGS, ENGINE DRAIN, TRANSMISSION DRAIN, AXLE(S) FILL AND DRAIN			STD
345-001	PAINTED SHIFT LEVER, SOLID LINKAGE			N/C
370-002	AIR TO OIL TRANSMISSION COOLER			STD
35T-003	SYNTHETIC TRANSMISSION LUBE			STD
Front Axle and Equipment				
400-1A7	DETROIT DA-F-13 3-3 13,300# FF1 71.5 KPI/3.74 DROP SINGLE FRONT AXLE			$110.00
418-058	CONMET PRESET PLUS PREMIUM ALUMINUM FRONT HUBS			($620.00)
402-049	MERITOR 16.5X5 Q+ CAST SPIDER CAM FRONT BRAKES, DOUBLE ANCHOR, FABRICATED SHOES			($194.00)
403-043	2011/2013-FMVSS 121 RSD FRONT BRAKE LINING			STD
419-023	CONMET CAST IRON FRONT BRAKE DRUMS			$336.00
409-006	FRONT OIL SEALS			STD
408-001	VENTED FRONT HUB CAPS WITH WINDOW, CENTER AND SIDE PLUGS - OIL			STD
405-002	MERITOR AUTOMATIC FRONT SLACK ADJUSTERS			$115.00
406-001	STANDARD KING PIN BUSHINGS			STD
536-087	SHEPPARD HD94 POWER STEERING			$417.00
534-015	2 QUART SEE THROUGH POWER STEERING RESERVOIR			STD
533-001	OIL/AIR POWER STEERING COOLER			N/C
40T-003	SYNTHETIC 40/50W FRONT AXLE LUBE			$8.00
Front Suspension				
620-1D8	13,300# TAPERLEAF FRONT SUSPENSION	10		$135.00
619-005	MAINTENANCE FREE RUBBER BUSHINGS - FRONT SUSPENSION			STD

Prepared by:
Pat Torres
LONESTAR TRUCK GROUP
ALBUQUERQUE
12901 I-40 WEST FRONTAGE
ROAD
ALBUQUERQUE, NM 87121
Phone: 505-833-1000

Data Code	Description	Weight Front	Weight Rear	Retail Price
410-001	FRONT SHOCK ABSORBERS			STD
Rear Axle and Equipment				
420-074	RT-40-160 40,000# R-SERIES TANDEM REAR AXLE		370	$3,664.00
450-058	CONMET PRESET PLUS PREMIUM ALUMINUM REAR HUBS			($1,339.00)
421-373	3.73 REAR AXLE RATIO			N/C
424-001	IRON REAR AXLE CARRIER WITH STANDARD AXLE HOUSING			STD
386-044	RPL25 MERITOR MAIN DRIVELINE	-20	-20	STD
388-039	RPL20 MERITOR INTERAXLE DRIVELINE			STD
452-006	DRIVER CONTROLLED TRACTION DIFFERENTIAL - BOTH TANDEM REAR AXLES		30	$1,317.00
878-023	(1) INTERAXLE LOCK VALVE, (1) DRIVER CONTROLLED DIFFERENTIAL LOCK FORWARD-REAR AND REAR-REAR AXLE VALVE			N/C
87A-015	INDICATOR LIGHT FOR EACH INTERAXLE LOCKOUT SWITCH ENGAGE <30MPH;DISENGAGE>50MPH			N/C
87B-009	INDICATOR LIGHT AND BUZZER FOR EACH DIFFERENTIAL LOCKOUT SWITCH			N/C
423-019	MERITOR 16.5X8.62 Q+ CAST SPIDER CAM REAR BRAKES, DOUBLE ANCHOR, FABRICATED SHOES			($653.00)
433-043	2011/2013-FMVSS 121 RSD REAR BRAKE LININGS			STD
434-005	BRAKE CAMS AND CHAMBERS ON FORWARD SIDE OF DRIVE AXLE(S) WITH AUXILIARY SUPPORT BRACKETS			N/C
451-023	CONMET CAST IRON REAR BRAKE DRUMS			$723.00
440-006	REAR OIL SEALS			STD
426-101	WABCO TRISTOP D LONGSTROKE 2-DRIVE AXLE SPRING PARKING CHAMBERS		20	$138.00
428-002	MERITOR AUTOMATIC REAR SLACK ADJUSTERS			$248.00
41T-002	CURRENT AVAILABLE SYNTHETIC 75W-90 REAR AXLE LUBE			N/C
42T-001	STANDARD REAR AXLE BREATHER(S)			STD
Rear Suspension				
622-1M7	AIRLINER 40,000# LIGHTWEIGHT EXTRA DUTY REAR SUSPENSION WITH CHAIN CLEARANCE		40	$694.00

Prepared by:
Pat Torres
LONESTAR TRUCK GROUP
ALBUQUERQUE
12901 I-40 WEST FRONTAGE
ROAD
ALBUQUERQUE, NM 87121
Phone: 505-833-1000

Data Code	Description	Weight Front	Weight Rear	Retail Price
621-118	7.9 INCH NOMINAL RIDE HEIGHT (415MM GLOBAL REFERENCE HEIGHT)			N/C
431-005	RESTRAINED AXLE SEATS IN AXLE CLAMP GROUP			N/C
624-025	55 INCH AXLE SPACING			N/C
888-066	IGNITION CONTROLLED ELECTRIC DUMP SWITCH FOR AIR SUSPENSION WITH PARK BRAKE INTERLOCKED OVERFILL PROVISION WITH GAUGE			$427.00
87D-012	REAR AIR SUSPENSION DUMP VALVE AUTOFILL >5 MPH WITH INDICATOR LIGHT			STD
910-019	SINGLE AIR REAR SUSPENSION LEVELING VALVE WITH ADDITIONAL VALVE FOR OVERFILL PROVISION			$437.00
623-002	TRANSVERSE CONTROL RODS			STD
439-005	REAR SHOCK ABSORBERS - TWO AXLES (TANDEM) (AIR RIDE SUSPENSION)			STD
Brake System				
490-109	WABCO 6S/4M ABS WITH TRACTION CONTROL WITH ATC SHUT OFF SWITCH			($66.00)
871-001	REINFORCED NYLON, FABRIC BRAID AND WIRE BRAID CHASSIS AIR LINES			STD
432-003	RELAY VALVE WITH 5-8 PSI CRACK PRESSURE, NO REAR PROPORTIONING VALVE			STD
480-086	BW AD-9SI BRAKE LINE AIR DRYER WITH HEATER			$2.00
483-003	BENDIX OIL COALESCING FILTER FOR AIR DRYER			N/C
479-012	AIR DRYER MOUNTED UNDER HOOD			STD
460-014	STEEL AIR TANKS MOUNTED BELOW FRAME RAILS	5	5	$12.00
477-004	PULL CABLES ON ALL AIR RESERVOIR(S)			STD
Trailer Connections				
481-003	12 FOOT STRAIGHT TRAILER AIR HOSE			STD
476-002	36 INCH STAINLESS STEEL SLIDE BAR WITH SPRING TYPE AIR HOSE HANGER			STD
484-032	COMBINATION DUMMY GLAD HANDS AND LIGHT PLUG HOLDER MOUNTED LH BACK OF CAB WITH GROUND ACCESS			STD
296-010	PRIMARY CONNECTOR/RECEPTACLE WIRED FOR SEPARATE STOP/TURN, ABS CENTER PIN POWERED THROUGH IGNITION			STD

Prepared by:
Pat Torres
LONESTAR TRUCK GROUP
ALBUQUERQUE
12901 I-40 WEST FRONTAGE
ROAD
ALBUQUERQUE, NM 87121
Phone: 505-833-1000

Data Code	Description	Weight Front	Weight Rear	Retail Price
297-132	SAE J560 7-WAY PRIMARY TRAILER CABLE RECEPTACLE MOUNTED BACK OF CAB/BACK OF SLEEPER			STD
1AZ-007	INBOARD FLAG BRACKET LOCATED AT BACK OF CAB/BACK OF SLEEPER			N/C
310-002	12 FOOT DETACHABLE STRAIGHT PRIMARY TRAILER ELECTRICAL CABLE WITH SAE J560 CONNECTOR			STD
Wheelbase & Frame				
545-507	5075MM (200 INCH) WHEELBASE			N/C
546-1C2	8.0MM X 88.0MM X 281.0MM STEEL FRAME (0.31X3.46X11.06 INCH) 120 KSI	-120	150	$154.00
552-028	1525MM (60 INCH) REAR FRAME OVERHANG			N/C
55W-005	FRAME OVERHANG RANGE: 51 INCH TO 60 INCH	-20	40	N/C
AC8-99D	CALC'D BACK OF CAB TO REAR SUSP C/L (CA) : 124.8 in			
AE4-99D	CALC'D FRAME LENGTH - OVERALL : 292.28 in			
ZF1-99D	FRAME HEIGHT TOP FRONT UNLADEN : 32.88 in			
ZF2-99D	FRAME HEIGHT TOP FRONT LADEN : 30.86 in			
ZF3-99D	FRAME HEIGHT TOP REAR UNLADEN : 40.02 in			
ZF4-99D	FRAME HEIGHT TOP REAR LADEN : 38.55 in			
553-031	FLANGE TAPERED END OF FRAME, GRIND AND POLISH WELDS			STD
561-001	STANDARD CROSSMEMBER BACK OF TRANSMISSION			STD
562-001	STANDARD MIDSHIP #1 CROSSMEMBER(S)			STD
572-029	TRACTOR C-CHANNEL CROSSMEMBER WITH 3.5 INCH KINGPIN CLEARANCE			$64.00
565-002	HEAVY DUTY SUSPENSION CROSSMEMBER			N/C
568-001	STANDARD WEIGHT REAR SUSPENSION CROSSMEMBER			STD
Chassis Equipment				
025-003	POLISHED ALUMINUM DIAMOND PLATE WST EQUIPMENT COVERS			N/C
674-019	LH BACK OF CAB ACCESS, GRAB HANDLES WITH SINGLE RUBBER INSERT			$25.00
592-054	21 INCH (525MM) DECK PLATE FLUSH MOUNTED BETWEEN RAILS			STD
556-030	PAINTED AERODYNAMIC BUMPER			STD

Prepared by:
Pat Torres
LONESTAR TRUCK GROUP
ALBUQUERQUE
12901 I-40 WEST FRONTAGE
ROAD
ALBUQUERQUE, NM 87121
Phone: 505-833-1000

Data Code	Description	Weight Front	Weight Rear	Retail Price
558-070	REMOVABLE FRONT TOW/RECOVERY DEVICE,STORED ON CHASSIS FRAME	15		$67.00
574-007	BUMPER MOUNTING FOR (3) LICENSE PLATES			STD
585-1A8	BETTS B-60S STAINLESS STEEL MUDFLAP BRACKETS		10	$147.00
590-032	WESTERN STAR LOGO BLACK MUDFLAPS			STD
551-002	HUCK-SPIN ROUND COLLAR CHASSIS FASTENERS			STD
44Z-002	EXTERIOR HARNESSES WRAPPED IN ABRASION TAPE			STD
Fifth Wheel				
578-1CG	JOST JSK37 SERIES 24.0 INCH AIR SLIDE FIFTH WHEEL - 2 INCH SLIDE INCREMENTS		125	$86.00
577-305	FIFTH WHEEL 305MM (12.0 INCHES) AHEAD OF SUSPENSION CENTERLINE			STD
582-016	222MM (8.75 INCH) FIFTH WHEEL HEIGHT		5	N/C
570-001	STEEL OUTBOARD ANGLE - FIFTH WHEEL MOUNTING			STD
890-001	DASH MOUNTED CONTROL AND PLUMBING FOR FIFTH WHEEL			STD
579-005	LH FIFTH WHEEL RELEASE			N/C
Fuel Tanks				
206-156	100 GALLON/378 LITER ALUMINUM FUEL TANK - RH			STD
204-156	100 GALLON/378 LITER ALUMINUM FUEL TANK - LH			STD
218-006	25 INCH DIAMETER FUEL TANK(S)			STD
215-007	PLAIN ALUMINUM/PAINTED STEEL FUEL/HYDRAULIC TANK(S) WITH POLISHED STAINLESS STEEL BANDS			$240.00
212-014	LH FUEL TANK MOUNTED FORWARD, RH FUEL TANK MOUNTED AFT	30	-30	$278.00
664-001	PLAIN STEP FINISH			STD
205-001	FUEL TANK CAP(S)			STD
216-020	EQUIFLO INBOARD FUEL SYSTEM			STD
202-016	HIGH TEMPERATURE REINFORCED NYLON FUEL LINE			STD
Tires				
093-994	MICHELIN XZE 12R22.5 16 PLY RADIAL FRONT TIRES	50		$300.00

Prepared by:
Pat Torres
LONESTAR TRUCK GROUP
ALBUQUERQUE
12901 I-40 WEST FRONTAGE
ROAD
ALBUQUERQUE, NM 87121
Phone: 505-833-1000

Data Code	Description	Weight Front	Weight Rear	Retail Price
094-1RK	MICHELIN X WORKS Z 11R22.5 16 PLY RADIAL REAR TIRES		168	$320.00
Wheels				
502-428	ACCURIDE 28828 22.5X8.25 10-HUB PILOT 6.18 INSET 2-HAND HD STEEL DISC FRONT WHEELS	26		$88.00
505-428	ACCURIDE 28828 22.5X8.25 10-HUB PILOT 2-HAND HD STEEL DISC REAR WHEELS		104	$352.00
50U-020	FLOW BELOW MOLD IN COLOR GRANITE GRAY AERODYNAMIC REAR AXLE WHEEL COVERS WITH LOCK			STD
496-011	FRONT WHEEL MOUNTING NUTS			STD
497-011	REAR WHEEL MOUNTING NUTS			STD
Cab Exterior				
829-111	126 INCH BBC ALUMINUM CONVENTIONAL CAB			STD
682-998	NO SLEEPER BOX/SLEEPERCAB	-510	-515	($12,854.00)
783-998	NO SIDE EXTENDERS	-20	-20	($1,192.00)
82A-029	PAINTED CAB ACCENT MOLDING			STD
782-026	PAINTED FRAME SIDE FAIRINGS TO BACK OF SIDE EXTENDERS			STD
779-998	NO FORWARD CHASSIS FAIRING SUPPORT			($108.00)
770-002	LOW GROUND CLEARANCE CHASSIS FAIRING SKIRTS			STD
704-998	NO BAGGAGE DOOR			($174.00)
678-053	INTERIOR GRAB HANDLES WITH ADDED LOWER LH AND RH A PILLAR GRAB HANDLES			STD
65X-010	BRIGHT HOOD MOUNTED AIR INTAKE GRILLE, BLACK SCREEN, WITH LED ACCENT LIGHTS			STD
644-001	AERODYNAMIC HOOD			STD
67U-001	HOOD OPENING ASSIST WITH LOCKING STRUT			STD
652-021	PAINTED WESTERN STAR NAMEPLATES			STD
727-096	DUAL ROUND AIR HORNS, SINGLE BASE, MOUNTED UNDER CAB	4		$83.00
726-002	DUAL ELECTRIC HORNS			$12.00
575-001	REAR LICENSE PLATE MOUNT END OF FRAME			STD
312-095	DUAL STAGE INTELLIGENT LED HEADLIGHTS WITH HEATED LENS SYSTEM			STD
302-073	VISOR MOUNTED LED MARKER LIGHTS			STD
311-001	DAYTIME RUNNING LIGHTS			STD
294-1AY	INTEGRAL LED STOP/TAIL/BACKUP LIGHTS			STD

Prepared by:
Pat Torres
LONESTAR TRUCK GROUP
ALBUQUERQUE
12901 I-40 WEST FRONTAGE
ROAD
ALBUQUERQUE, NM 87121
Phone: 505-833-1000

Data Code	Description	Weight Front	Weight Rear	Retail Price
300-061	LED REAR FACING TURN SIGNAL LAMPS IN CONVEX MIRROR LENS IN ADDITION TO STANDARD			STD
318-1D7	(2) FLUSH LED UTILITY LIGHTS MOUNTED BACK OF CAB/SLEEPER			STD
744-104	C-BAR MIRROR SYSTEM WITH DUAL HEATED MIRRORS WITH INTEGRAL HEATED CONVEX, DUAL REMOTE, TURN SIGNAL, STAINLESS STEEL BACK COVER, AND BRIGHT C-BAR	20		$10.00
796-001	102 INCH EQUIPMENT WIDTH			STD
743-209	LH AND RH CONVEX MIRRORS INTEGRAL WITH PRIMARY MIRRORS			STD
74A-001	RH DOWN VIEW MIRROR			STD
74B-113	RH AND LH HEATED BLACK HOOD/FENDER MOUNTED SIDE VIEW MIRRORS WITH BLACK MOUNTING ARM			STD
729-001	STANDARD SIDE/REAR REFLECTORS			STD
73A-002	REAR REFLECTIVE DEVICE			STD
677-100	POLISHED ALUMINUM DIAMOND PLATE WST AFTERTREATMENT SYSTEM COVER			$333.00
275-061	PARK BRAKE REMINDER WARNING SYSTEM			STD
764-020	STAINLESS STEEL EXTERIOR SUN VISOR WITH INTEGRAL MARKER LIGHTS			STD
768-064	SINGLE SOLAR TINTED REAR WINDOW, (1) 31 INCH X 20 INCH	-10		$110.00
767-998	NO SIDE WINDOW	-15	-15	($870.00)
663-019	1-PIECE ROPED-IN SOLAR GREEN GLASS WINDSHIELD			STD
659-006	8 LITER (2 GAL) WINDSHIELD WASHER RESERVOIR, CAB MOUNTED, WITH FLUID LEVEL INDICATOR			STD
Cab Interior				
707-1C4	CHARCOAL BLACK VINYL UP LEVEL INTERIOR			($564.00)
70K-017	CARBON WITH PREMIUM TEAK ACCENT			($84.00)
772-036	BLACK MATS AND ACCELERATOR RUB PAD			$17.00
773-998	NO FLOOR COVERING-SLPR (SLPR/INT)			($205.00)
771-998	NO BAGGAGE AREA FLOOR COVERING			($320.00)
785-014	(2) DASH MOUNTED POWER OUTLETS AND COIN TRAY			($23.00)
64D-998	NO LH SLEEPER STORAGE	-60		($970.00)
64E-998	NO RH SLEEPER STORAGE	-5		($735.00)
691-001	FORWARD ROOF MOUNTED CONSOLE			STD

Prepared by:
Pat Torres
LONESTAR TRUCK GROUP
ALBUQUERQUE
12901 I-40 WEST FRONTAGE
ROAD
ALBUQUERQUE, NM 87121
Phone: 505-833-1000

Data Code	Description	Weight Front	Weight Rear	Retail Price
693-019	LH AND RH DOOR STORAGE POCKETS INTEGRATED INTO MOLDED DOOR PANELS			STD
741-015	(2) COAT HOOKS ON BACKWALL OF CAB			($132.00)
626-998	NO LOWER BUNK			($735.00)
745-998	NO UPPER BUNK			($460.00)
666-998	NO BUNK RESTRAINT			($200.00)
738-021	DIGITAL ALARM CLOCK IN DRIVER DISPLAY			STD
720-025	5 LB. FIRE EXTINGUISHER MOUNTED INBOARD OF DRIVER SEAT	10		$59.00
689-998	NO AUXILIARY HVAC UNIT	-10	-10	($500.00)
170-015	STANDARD HEATER PLUMBING			STD
698-001	RADIATOR MOUNTED AIR CONDITIONER CONDENSER			STD
739-034	PREMIUM INSULATION			$83.00
322-998	NO BAGGAGE COMPARTMENT LIGHT			($45.00)
324-1B2	PREMIUM LED CAB LIGHTING			STD
325-998	NO SLEEPER INTERIOR LAMP			($265.00)
787-004	REMOTE KEYLESS ENTRY AND 2 TRANSMITTERS			STD
657-001	DOOR LOCKS AND IGNITION SWITCH KEYED THE SAME			STD
78G-004	KEY QUANTITY OF 4			$18.00
655-028	LH AND RH ELECTRIC DOOR LOCKS WITH AUTO UNLOCK FEATURE WHEN DOOR IS SET FROM OPEN TO CLOSED POSITION			STD
84C-003	BLACK DOOR HANDLES			STD
740-998	NO MATTRESS	-20	-15	($331.00)
284-998	NO POWER SUPPLY SLEEPER/CAB			($120.00)
722-001	TRIANGULAR REFLECTORS WITH FLARES	12		$60.00
756-1J7	ELITE 2.0 HIGH BACK AIR SUSPENSION DRIVER SEAT W/2 AIR LUMBAR,ACTIVE BOLSTER,INTEGRATED CUSHION EXTENSION, TILT,ADJUSTABLE SHOCK, MAP POCKET, HEAT & VENTILATION	30		$355.00
760-1J5	BASIC 2.0 HIGH BACK AIR SUSPENSION PASSENGER SEAT WITH 1 CHAMBER AIR LUMBAR, INTEGRATED CUSHION EXTENSION AND TILT			STD
757-002	BLACK SUSPENSION COVER FOR DRIVER AND PASSENGER SEATS	4		$100.00
759-006	DUAL DRIVER SEAT ARMRESTS AND INBOARD PASSENGER SEAT ARMREST	6		$37.00

Prepared by:
Pat Torres
LONESTAR TRUCK GROUP
ALBUQUERQUE
12901 I-40 WEST FRONTAGE
ROAD
ALBUQUERQUE, NM 87121
Phone: 505-833-1000

Data Code	Description	Weight Front	Weight Rear	Retail Price
758-135	BLACK MORDURA CLOTH DRIVER SEAT COVER WITH EMBROIDERED LOGO			STD
761-135	BLACK MORDURA CLOTH PASSENGER SEAT COVER WITH EMBROIDERED LOGO			STD
763-1AD	3 POINT ADJUSTABLE D-RING RETRACTOR DRIVER AND FIXED D-RING RETRACTOR PASSENGER SEAT BELTS WITH DRIVER SEAT BELT STATUS INDICATOR LIGHT AND AUDIBLE ALARM			STD
709-998	NO SLEEPER CURTAIN			($160.00)
540-070	4-SPOKE 18 INCH (450MM) LEATHER WRAPPED STEERING WHEEL WITH CHROME SWITCH BEZELS			STD
765-021	DRIVER AND PASSENGER INTERIOR SUN VISORS WITH ILLUMINATED VANITY MIRRORS			STD

Instruments & Controls

185-004	STANDARD FOOT PEDAL SYSTEM			STD
106-002	ELECTRONIC ACCELERATOR CONTROL			($51.00)
732-052	WESTERN STAR VOCATIONAL DASH PANEL - STANDARD			STD
870-002	BRIGHT ARGENT FINISH GAUGE BEZELS			$29.00
734-018	STANDARD CENTER INSTRUMENT PANEL			$26.00
838-001	(1) SINGLE BRAKE APPLICATION AIR GAUGE			$114.00
840-001	DUAL NEEDLE PRIMARY AND SECONDARY AIR PRESSURE GAUGE			N/C
198-025	INTAKE MOUNTED AIR RESTRICTION INDICATOR WITHOUT GRADUATIONS			STD
721-001	97 DB BACKUP ALARM		3	$34.00
149-015	ELECTRONIC CRUISE CONTROL WITH CONTROLS ON STEERING WHEEL SPOKES			($683.00)
156-007	KEY OPERATED IGNITION SWITCH AND INTEGRAL START POSITION; 4 POSITION OFF/RUN/START/ACCESSORY			STD
3ZM-998	NO MULTIMEDIA BOX			($139.00)
811-044	PREMIUM INSTRUMENT CLUSTER WITH 5.0 INCH TFT COLOR DISPLAY			($1,439.00)
160-038	HEAVY DUTY ONBOARD DIAGNOSTICS INTERFACE CONNECTOR LOCATED BELOW LH DASH			STD
844-001	2 INCH ELECTRIC FUEL GAUGE			N/C
845-011	FUEL FILTER RESTRICTION INDICATOR			STD
148-085	EMISSIONS LIMITED IDLE ADJUST			STD

Prepared by:
Pat Torres
LONESTAR TRUCK GROUP
ALBUQUERQUE
12901 I-40 WEST FRONTAGE
ROAD
ALBUQUERQUE, NM 87121
Phone: 505-833-1000

Data Code	Description	Weight Front	Weight Rear	Retail Price
866-019	DIGITAL DUAL REAR AXLE TEMPERATURE IN DRIVER DISPLAY WITH SENSOR SHIELDS			$90.00
856-001	ELECTRICAL ENGINE COOLANT TEMPERATURE GAUGE			N/C
854-008	DIGITAL ENGINE OIL TEMPERATURE IN DRIVER DISPLAY			STD
852-002	ELECTRIC ENGINE OIL PRESSURE GAUGE			N/C
864-022	DIGITAL TRANSMISSION OIL TEMPERATURE IN DRIVER DISPLAY			STD
867-004	ELECTRONIC OUTSIDE TEMPERATURE SENSOR DISPLAY IN DRIVER MESSAGE CENTER			STD
372-123	PTO CONTROLS FOR ENHANCED VEHICLE ELECTRIC/ELECTRONIC ARCHITECTURE			$16.00
736-998	NO OBSTACLE DETECTION SYSTEM	-20		($4,324.00)
73K-998	NO SIDE OBJECT DETECTION SYSTEM	-10		($630.00)
49B-004	ELECTRONIC STABILITY CONTROL			STD
73B-998	NO LANE DEPARTURE WARNING SYSTEM	-10		($1,080.00)
6TS-012	(3) TMC RP 1226 ACCESSORY CONNECTORS: (2) LOCATED BEHIND PASSENGER SIDE REMOVABLE DASH PANEL, AND (1) LOCATED CENTER OF OVERHEAD CONSOLE			STD
746-136	AM/FM/WB WORLD TUNER RADIO WITH AUXILIARY INPUT, J1939			($309.00)
747-001	DASH MOUNTED RADIO			N/C
750-041	STANDARD SPEAKER SYSTEM			STD
753-007	AM/FM ANTENNA MOUNTED ON RH SIDE MIRROR	2		$11.00
748-008	POWER AND GROUND WIRING PROVISION OVERHEAD			STD
749-001	ROOF/OVERHEAD CONSOLE CB RADIO PROVISION			STD
751-001	SINGLE REMOTE SPEAKER WITH LEAD FOR 2-WAY RADIO			STD
752-004	SINGLE FIBERGLASS LH MIRROR MOUNTED CB ANTENNA WITH BRACKET AND LEAD	2		N/C
75W-002	SHARKFIN MULTI-BAND ANTENNA: AM/FM/WEATHERBAND, WIFI/BLUETOOTH, SDAR/SIRIUSXM, GNSS/GPS			$33.00
78C-998	NO DIGITAL SATELLITE AUDIO RECEIVER ANTENNA			($91.00)

Prepared by:
Pat Torres
LONESTAR TRUCK GROUP
ALBUQUERQUE
12901 I-40 WEST FRONTAGE
ROAD
ALBUQUERQUE, NM 87121
Phone: 505-833-1000

Data Code	Description	Weight Front	Weight Rear	Retail Price
810-027	ELECTRONIC MPH SPEEDOMETER WITH SECONDARY KPH SCALE, WITHOUT ODOMETER			N/C
812-032	ELECTRONIC 2500 RPM TACHOMETER			N/C
813-1C8	DETROIT CONNECT PLATFORM HARDWARE			STD
8D1-205	5 YEARS DETROIT CONNECT BASE PACKAGE (FEATURES VARY BY MODEL) DETROIT CONNECT PLATFORM			STD
162-002	IGNITION SWITCH CONTROLLED ENGINE STOP			STD
329-111	TWO EXTRA HARDWIRED SWITCHES IN DASH, ROUTE TO UNDER CAB, CAPPED			$105.00
81Y-005	PRE-TRIP INSPECTION FEATURE FOR EXTERIOR LAMPS ONLY			STD
482-001	BW TRACTOR PROTECTION VALVE			STD
883-001	TRAILER HAND CONTROL BRAKE VALVE			STD
836-015	DIGITAL VOLTAGE DISPLAY INTEGRAL WITH DRIVER DISPLAY			STD
660-008	SINGLE ELECTRIC WINDSHIELD WIPER MOTOR WITH DELAY			STD
304-030	ROTARY HEADLAMP SWITCH, MARKER LIGHTS/HEADLIGHTS SWITCH WITH PULL OUT FOR OPTIONAL FOG/ROAD LAMPS			($6.00)
882-004	TWO VALVE PARKING BRAKE SYSTEM WITH WARNING INDICATOR			($30.00)
299-020	SELF CANCELING TURN SIGNAL SWITCH WITH DIMMER, HEADLAMP FLASH, WASH/WIPE/INTERMITTENT			STD

Design

065-000	PAINT: ONE SOLID COLOR			STD

Color

980-5F6	CAB COLOR A: L0006EY WHITE ELITE EY			STD
986-020	BLACK, HIGH SOLIDS POLYURETHANE CHASSIS PAINT			STD
987-995	CHASSIS SIDE FAIRINGS PAINTED SAME AS LOWER CAB SECTION OR FENDER			STD
962-972	POWDER WHITE (N0006EA) FRONT WHEELS/RIMS (PKWHT21, TKWHT21, W, TW)			STD
966-972	POWDER WHITE (N0006EA) REAR WHEELS/RIMS (PKWHT21, TKWHT21, W, TW)			STD
964-995	BUMPER PAINTED SAME AS FENDERS/LOWER SECTION OF CAB			STD

Extended Front Axle Coverage

Prepared by:
Pat Torres
LONESTAR TRUCK GROUP
ALBUQUERQUE
12901 I-40 WEST FRONTAGE
ROAD
ALBUQUERQUE, NM 87121
Phone: 505-833-1000

Data Code	Description	Weight Front	Weight Rear	Retail Price
WA4-037	AXLE: DETROIT FRONT ONLY; HD STANDARD 5 YEARS/200,000 MILES/322,000 KM EXTENDED AXLE COVERAGE			$70 00
Certification / Compliance				
996-001	U.S. FMVSS CERTIFICATION, EXCEPT SALES CABS AND GLIDER KITS			STD
Sales Programs				
PMY-74K	STARQUOTE 57X SALES PROGRAM			N/C

T O T A L V E H I C L E S U M M A R Y

Adjusted List Price

Adjusted List Price **	$227,084.00

Weight Summary

	Weight Front	Weight Rear	Total Weight
Factory Weight	9174 lbs	8300 lbs	17474 lbs
Total Weight	9174 lbs	8300 lbs	17474 lbs

I T E M S N O T I N C L U D E D I N A D J U S T E D L I S T P R I C E

Other Factory Charges

PNZ-004	CARB22 BASE WARRANTY SURCHARGE DD15 / X15 E	$1,675.00
RAT-24Y	MY24 ESCALATOR	$2,750.00
RD1-205	5 YRS DETROIT CONNECT BASE PKG (FEATURES VARY BY MODEL) DETROIT CONNECT PLATFORM	STD
RFY-022	FRONT TIRE SURCHARGE	$50 00
RFU-022	REAR TIRE SURCHARGE	$200.00
RFZ-024	MY24/CY23 PRICING SURCHARGE	$6,900.00

Prepared by:
Pat Torres
LONESTAR TRUCK GROUP
ALBUQUERQUE
12901 I-40 WEST FRONTAGE
ROAD
ALBUQUERQUE, NM 87121
Phone: 505-833-1000

P73-2WS	STANDARD DESTINATION CHARGE	$3,375.00

Extended Warranty

WAI-67F	EW4: DD15 CARB22 HWY 5 YEARS/500,000 MILES/805,000 KM. EXTENDED ENGINE COVERAGE. FEX APPLIES	$4,095.00
WBB-248	TC4: HD STANDARD ON-HIGHWAY 5 YEARS/250,000 MILES/402,500 KM EXTENDED TRUCK COVERAGE. FEX APPLIES	$3,850.00
WBD-028	EATON HEAVY DUTY CLUTCH EXTENDED WARRANTY, 5 YEARS/500,000 MILES FEX	$284.00
WAK-158	EATON HEAVY DUTY MANUAL 1750 FT/LBS OR LESS TRANSMISSION EXTENDED WARRANTY, 5 YEARS/UNLIMITED MILES FEX	$776.00
WAL-251	AXLE: NON-DETROIT TANDEM REAR ONLY: HD STANDARD 5 YEAR/200,000 MILE/322,000 KM EXTENDED COVERAGE	$160.00

Currency Exchange Rate	1.0000
Total Extended Warranty (Local Currency)	$9,235.00

(+) Weights shown are estimates only.
If weight is critical, contact Customer Application Engineering.
(**) Prices shown do not include taxes, fees, etc... "Net Equipment Selling Price" is located on the Quotation Details Proposal Report.

(***) All cost increases for major components (Engines, Transmissions, Axles, Front and Rear Tires) and government mandated requirements, tariffs, and raw material surcharges will be passed through and added to factory invoices.

Prepared by:
Pat Torres
LONESTAR TRUCK GROUP
ALBUQUERQUE
12901 I-40 WEST FRONTAGE
ROAD
ALBUQUERQUE, NM 87121
Phone: 505-833-1000

CONDENSED SPECIFICATION PROPOSAL

Data Code	Description	Weight Front	Weight Rear	Retail Price
Vehicle Configuration				
001-473	WESTERN STAR 57X	9,770	7,770	$243,996.00
002-002	SET BACK AXLE - TRACTOR			STD
Engine				
101-28M	DETROIT DD15 GEN 5 HIGH POWER 14.8L 505 HP @ 1625 RPM, 1900 GOV RPM, 1650 LB-FT @ 975 RPM			$1,581.00
Engine Equipment				
128-002	JACOBS COMPRESSION BRAKE			STD
016-1F3	RH OUTBOARD UNDER STEP MOUNTED HORIZONTAL AFTERTREATMENT SYSTEM ASSEMBLY WITH RH FRAME MOUNTED VERTICAL TAILPIPE (ROUTED OUTSIDE/ABOVE RAIL)	40	40	$878.00
Transmission				
342-1BO	EATON FULLER RTLO-16918B TRANSMISSION	80	40	($896.00)
Front Axle and Equipment				
400-1A7	DETROIT DA-F-13.3-3 13,300# FF1 71.5 KPI/3.74 DROP SINGLE FRONT AXLE			$110.00
Front Suspension				
620-1D8	13,300# TAPERLEAF FRONT SUSPENSION	10		$135.00
Rear Axle and Equipment				
420-074	RT-40-160 40,000# R-SERIES TANDEM REAR AXLE		370	$3,664.00
421-373	3.73 REAR AXLE RATIO			N/C
Rear Suspension				
622-1M7	AIRLINER 40,000# LIGHTWEIGHT EXTRA DUTY REAR SUSPENSION WITH CHAIN CLEARANCE		40	$694.00
Wheelbase & Frame				
545-507	5075MM (200 INCH) WHEELBASE			N/C
546-1C2	8.0MM X 88.0MM X 281.0MM STEEL FRAME (0.31X3.46X11.06 INCH) 120 KSI	-120	150	$154.00
Fuel Tanks				
206-156	100 GALLON/378 LITER ALUMINUM FUEL TANK - RH			STD
204-156	100 GALLON/378 LITER ALUMINUM FUEL TANK - LH			STD
Tires				

Prepared by:
Pat Torres
LONESTAR TRUCK GROUP
ALBUQUERQUE
12901 I-40 WEST FRONTAGE
ROAD
ALBUQUERQUE, NM 87121
Phone: 505-833-1000

Data Code	Description	Weight Front	Weight Rear	Retail Price
093-994	MICHELIN XZE 12R22.5 16 PLY RADIAL FRONT TIRES	50		$300.00
094-1RK	MICHELIN X WORKS Z 11R22.5 16 PLY RADIAL REAR TIRES		168	$320.00
Wheels				
502-428	ACCURIDE 28828 22.5X8.25 10-HUB PILOT 6.18 INSET 2-HAND HD STEEL DISC FRONT WHEELS	26		$88.00
505-428	ACCURIDE 28828 22.5X8.25 10-HUB PILOT 2-HAND HD STEEL DISC REAR WHEELS		104	$352.00
Cab Exterior				
829-111	126 INCH BBC ALUMINUM CONVENTIONAL CAB			STD
682-998	NO SLEEPER BOX/SLEEPERCAB	-510	-515	($12,854.00)
Color				
980-5F6	CAB COLOR A: L0006EY WHITE ELITE EY			STD
986-020	BLACK, HIGH SOLIDS POLYURETHANE CHASSIS PAINT			STD

Adjusted List Price

Adjusted List Price **	$227,084.00

Weight Summary

	Weight Front	Weight Rear	Total Weight
Factory Weight*	9174 lbs	8300 lbs	17474 lbs
Total Weight*	9174 lbs	8300 lbs	17474 lbs

ITEMS NOT INCLUDED IN ADJUSTED LIST PRICE

Other Factory Charges

DELIVERY & ORDER PROCESSING CHARGE	$3,375.00

(+) Weights shown are estimates only

Prepared by:
Pat Torres
LONESTAR TRUCK GROUP ALBUQUERQUE
12901 I-40 WEST FRONTAGE ROAD
ALBUQUERQUE, NM 87121
Phone: 505-833-1000

If weight is critical, contact Customer Application Engineering.

(**) Prices shown do not include taxes, fees, etc... "Net Equipment Selling Price" is located on the Quotation Details Proposal Report.

(***) All cost increases for major components (Engines, Transmissions, Axles, Front and Rear Tires) and government mandated requirements, tariffs, and raw material surcharges will be passed through and added to factory invoices.

Prepared by:
Pat Torres
LONESTAR TRUCK GROUP
ALBUQUERQUE
12901 I-40 WEST FRONTAGE
ROAD
ALBUQUERQUE, NM 87121
Phone: 505-833-1000

QUOTATION

WESTERN STAR 57X

SET BACK AXLE - TRACTOR
DETROIT DD15 GEN 5 HIGH POWER 14.8L 505 HP @ 1625 RPM, 1900 GOV RPM, 1650 LB-FT @ 975 RPM
EATON FULLER RTLO-16918B TRANSMISSION
RT-40-160 40,000# R-SERIES TANDEM REAR AXLE
AIRLINER 40,000# LIGHTWEIGHT EXTRA DUTY REAR SUSPENSION WITH CHAIN CLEARANCE
DETROIT DA-F-13.3-3 13,300# FF1 71.5 KPI/3.74 DROP SINGLE FRONT AXLE
13,300# TAPERLEAF FRONT SUSPENSION
126 INCH BBC ALUMINUM CONVENTIONAL CAB
NO SLEEPER BOX/SLEEPERCAB
5075MM (200 INCH) WHEELBASE
JOST JSK37 SERIES 24.0 INCH AIR SLIDE FIFTH WHEEL - 2 INCH SLIDE INCREMENTS
8.0MM X 88.0MM X 281.0MM STEEL FRAME (0.31X3.46X11.06 INCH) 120 KSI
1525MM (60 INCH) REAR FRAME OVERHANG

			PER UNIT		TOTAL
VEHICLE PRICE	TOTAL # OF UNITS (1)	$	165,186	$	165,186
EXTENDED WARRANTY		$	9,235	$	9,235
DEALER INSTALLED OPTIONS		$	0	$	0
CUSTOMER PRICE BEFORE TAX		$	*174,421*	$	*174,421*
TAXES AND FEES					
FEDERAL EXCISE TAX (FET)		$	(309)	$	(309)
TAXES AND FEES		$	0	$	0
OTHER CHARGES		$	0	$	0
TRADE-IN					
TRADE-IN ALLOWANCE		$	(0)	$	(0)
BALANCE DUE	(LOCAL CURRENCY)	$	174,112	$	174,112

COMMENTS:
Projected delivery on ___ / ___ / ___ provided the order is received before ___ / ___ / ___.

APPROVAL:
Please indicate your acceptance of this quotation by signing below:

Customer: X_____ Date: ___ / ___ / ___.

Daimler Truck Financial

Financing that works for you.

See your local dealer for a competitive quote from Daimler Truck Financial, or contact us at Information@dtfoffers.com

Daimler Truck Financial offers a variety of finance, lease and insurance solutions to fit your business needs. For more information about our products and services, visit our website at www.daimler-truckfinancial.com.

Prepared by:
Pat Torres
LONESTAR TRUCK GROUP
ALBUQUERQUE
12901 I-40 WEST FRONTAGE
ROAD
ALBUQUERQUE, NM 87121
Phone: 505-833-1000

Prepared by:
Pat Torres
LONESTAR TRUCK GROUP
ALBUQUERQUE
12901 I-40 WEST FRONTAGE ROAD
ALBUQUERQUE, NM 87121
Phone: 505-833-1000

DIMENSIONS

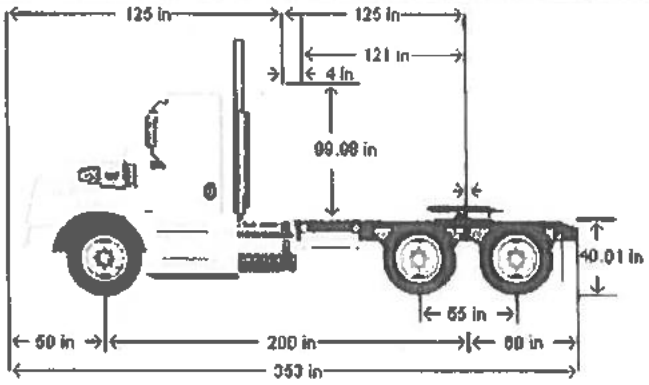

VEHICLE SPECIFICATIONS SUMMARY - DIMENSIONS

Model 57X
Wheelbase (545) ..... 5075MM (200 INCH) WHEELBASE
Rear Frame Overhang (552) ..... 1525MM (60 INCH) REAR FRAME OVERHANG
Fifth Wheel (578) ..... JOST JSK37 SERIES 24.0 INCH AIR SLIDE FIFTH WHEEL - 2 INCH SLIDE INCREMENTS
- Mounting Location (577) ..... FIFTH WHEEL 305MM (12.0 INCHES) AHEAD OF SUSPENSION CENTERLINE
- Maximum Forward Position (in) 12
- Maximum Rearward Position (in) ..... -12
- Amount of Slide Travel (in) 24
- Slide Increment (in) 2
- Desired Slide Position (in) 0.0

Cab Size (829) ..... 126 INCH BBC ALUMINUM CONVENTIONAL CAB
Sleeper (682) ..... NO SLEEPER BOX/SLEEPERCAB
Exhaust System (016) ..... RH OUTBOARD UNDER STEP MOUNTED HORIZONTAL AFTERTREATMENT SYSTEM ASSEMBLY WITH RH FRAME MOUNTED VERTICAL TAILPIPE (ROUTED OUTSIDE/ABOVE RAIL)

TABLE SUMMARY - DIMENSIONS

Prepared by:
Pat Torres
LONESTAR TRUCK GROUP
ALBUQUERQUE
12901 I-40 WEST FRONTAGE
ROAD
ALBUQUERQUE, NM 87121
Phone: 505-833-1000

Dimensions	Inches
Bumper to Back of Cab (BBC)	124.6
Bumper to Centerline of Front Axle (BA)	49.6
Front Axle to Back of Cab (AC)	75.0
Back of Cab to Centerline of Rear Axle(s) (CA)	124.6
Effective Back of Cab to Centerline of Rear Axle(s) (Effective CA)	120.6
Back of Cab Protrusions (Exhaust/Intake) (CP)	2.0
Back of Cab Protrusions (Side Extenders/Trim Tab) (CP)	0.0
Back of Cab Protrusions (CNG Tank)	0.0
Back of Cab Clearance (CL)	4.2
Back of Cab to End of Frame	228.1
Cab Height (CH)	100.0
Fifth Wheel to Centerline of Rear Axle(s) (FW)	0.0
Wheelbase (WB)	199.8
Frame Overhang (OH)	60.0
Overall Frame Length	292.3
Overall Length (OAL)	352.7
Rear Axle Spacing	55.0
Unladen Frame Height at Centerline of Rear Axle	40.0

Performance calculations are estimates only. If performance calculations are critical, please contact Customer Application Engineering.

State of New Mexico

Shelly Trujillo
County Clerk
575-894-2840

Candace Chavez
County Treasurer
575-894-3524

Michael Huston
County Assessor
575-894-2589

Tom Pestak
Probate Judge
575-740-4900

SIERRA COUNTY
NEW MEXICO

Amber Vaughn
County Manager
1712 N. Date Street Suite D
Truth or Consequences, New Mexico 87901

County of Sierra

Travis Day
Commission Chair
575-894-6215

James E. Paxon
Commission Vice Chair
575-894-6215

Hank Hopkins
Commissioner
575-894-6215

Joshua Baker
Sheriff
575-894-9150

CES AGREEMENT BETWEEN DESERT WEST ENTERPRISES, LLC AND THE COUNTY OF SIERRA

March 15, 2023

Dear Commissioners:

RE: MICROSURFACING MATERIALS-CES

The County Road department would like to utilize CES to purchase road materials to provide microsurfacing on their CAP and SP projects. I will defer to Billy, should there be any questions pertaining the description should any arise.

Based on discussion with the County Manager and the Road Department, a determination was issued, to move forward with the tradition CES purchase. We were able to utilize the **CES Agreement #2020-08-R2110-ALL**. Please see attached documentation.

I am requesting our County Commission to approve the purchase of the road materials and allow me to move forward with this procurement. Thank you.

Total Balance: $207,092.25

Respectively,

Jocelyn Holguin
Chief Procurement Officer

FILE COPY

COUNTY OF SIERRA
SIERRA COUNTY ROAD DEPARTMENT
ATTENTION: DEPARTMENT
2501 SOUTH BROADWAY,
TRUTH OR CONSEQUENCES NM 87901

County Department: ROAD DEPARTMENT

Requester: LIZ CARSON ROAD

Requisition Number: 6095 PO Number:

Vendor Number: 4967

Date: 3/14/23

REQUISITION

Price Each	Quantity	Line Item Number	Description of Item or Service	TOTAL
112153.13	1.00	417-52-2180	SHOULDER REPAIR (CAP)	112153.13
94939.12	1.00	416-51-2180	SHOULDER REPAIR (SP)	94939.12
			*DESERT WEST ENTERPRISES, LLC	
			CES AGREEMENT	
			#2023-08-R2110-ALL	
			MICROSURFACING MATERIALS	
			AGENDA ITEM: 3/15/2023	
			SEE ATTACHED:	
		COUNTY MANAGER ELECTRONIC APPROVAL DATE:		
			Total this Page	207092.25

RECEIVED MAR 15 2023 BY

COOPERATIVE EDUCATIONAL SERVICES

Name Of Supplier

Notices.

Any notice required to be given to either party by this Agreement shall be in writing and shall be delivered in person, by courier service or by U.S. mail, either first class or certified, return receipt requested, postage prepaid, as follows:

To: County of Sierra

Jocelyn Holguin, Chief Procurement Officer
1712 N. Date Street Suite D
Truth or Consequences, NM 87901

To the Contractor:

DESERT WEST ENTERPRISES, LLC
5323W. 2ND Street
Roswell, NM 88201

Phone: 575.623.3990

CES-#2023-08-R2110-ALL

IN WITNESS WHEREOF, the parties have executed this Agreement as of the date of signature by the County Chief Procurement Officer below:

By: _____ Date: _____
Amber Vaughn, County Manager

BOARD OF COUNTY COMMISSIONERS

APPROVED, ADOPTED AND PASSED on this 21st day of March 2023.

_____

_____
Travis Day, Commissioner Chair

_____
James E. Paxon, Vice- Chair

_____
Hank Hopkins, Commissioner

Attest:

_____
Shelly Trujillo
Sierra County Clerk

Sierra County Chief Procurement Officer:

By: _____ Date: _____
Jocelyn Holguin, CPO
Sierra County

Price Proposal - Cooperative Educational Services JOC for Paving & Site Work - 2023-08-R2110-ALL

This proposal was prepared exclusively for Cooperative Educational Services

Job Number: 080
Job Name: Sierra County Spring Micro
Contractor: Desert West Enterprises, LLC
Date Created: 03/06/2023
Last Update: 03/07/2023
Proposal Value: $207,092.25
Construction Procurement Catalog: Year 2023 Quarter 1 - TRUTH/CONSEQUENCES, NM

Summary By Division

Division	Line Total
01 General Requirements	$13,208.34
01 General Requirements	$10,662.96
32 Exterior Improvements	$183,220.95

Non-Prepriced Items

Item Name	Division	QTY	Unit Price	Factor	Line Total
NM Gross Receipts Tax	01 General Requirements	13208.340000	$1.00	1.0000	$13,208.34

Detailed Price Proposal

Sr.#	Division	Line Item #	Mod	UOM	Description	Line Total
1	General Requirements	Non-Prepriced		EA	NM Gross Receipts Tax	$13,208.34
					QTY: 13208.340000 · Unit Price: $1.00 · Factor: 1.0000 · Total: $13,208.34	
2	General Requirements	015436501600		Ea.	Mobilization or demobilization, delivery charge for equipment, hauled on 50-ton capacity towed trailer 50-ton capacity	$10,662.96
					QTY: 5.000000 · Unit Price: $1,887.25 · Factor: 1.1300 · Total: $10,662.96	
3	Exterior Improvements	321236361130		S.Y.	Microsurfacing, Type II-MSE, (20lbs/sy, 1/4", 18% microsurfacing emulsion), roadway Roadway	$149,661.47
					QTY · Unit Price · Factor · Total	

			48225.000000	$2.63	1.1800	$149,661.47		
4	321236361130	S.Y.	Microsurfacing, Type II-MSE. (20lbs/sy. 1/4", 18% microsurfacing emulsion), roadway Roadway					$26,217.52
			QTY	Unit Price	Factor	Total		
			8448.000000	$2.63	1.1800	$26,217.52		
5	321236361230	S.Y.	Microsurfacing, Type IIIa-MSE. (32lbs/sy. 3/8", 15% microsurfacing emulsion), roadway Roadway					$7,341.96
			QTY	Unit Price	Factor	Total		
			1700.000000	$3.86	1.1800	$7,341.96		

RECEIVED
MAR 15 2023
BY:_____

PURCHASE ORDER #

_____

County of Sierra
Office of Administration
855 Van Patten Street
Truth or Consequences, New Mexico 87901
Phone 575-894-6215
Fax 575-894-9548

County Department: Road/Landfill

Purchase Order # :

Line Item Number: see below

Vendor Number: 5592

Date: 3/14/23

REQUISITION

Item Number	Quantity	Description of Item or Service	Price Each	Line Item Number	TOTAL
					-
	1	SHOULDER REPAIR (cap)	$112,153.13	417-52-2180	112,153.13
	1	SHOULDER REPAIR (sp)	$94,939.12	416-51-2180	94,939.12
					-
					-
					-
					-
					-
					-
					-
					-
					-
					-
					-
					-
					-
					207,092.25
			Total this Page		########

RECEIVED
MAR 15 2023
BY:

If new vendor, provide address & phone # below if available.

DESERT WEST ENT. LLC
Name Of Supplier

Example: ABC Bakery
123 Happy Lane
Truth or Consequences, NM 87901

PH: (575) 894-1234
FX: (575) 894-5678

Department Official

State of New Mexico

Shelly Trujillo
County Clerk
575-894-2840

Candace Chavez
County Treasurer
575-894-3524

Michael Huston
County Assessor
575-894-2589

Tom Pestak
Probate Judge
575-740-4900

SIERRA COUNTY
NEW MEXICO

Amber Vaughn
County Manager
1712 N. Date Street Suite D
Truth or Consequences, New Mexico 87901

County of Sierra

Travis Day
Commission Chair
575-894-6215

James E. Paxon
Commission Vice- Chair
575-894-6215

Hank Hopkins
Commissioner
575-894-6215

Joshua Baker
Sheriff
575-894-9150

STATE PRICEAGREEMENT BETWEEN 411 AND THE COUNTY OF SIERRA

March 15, 2023

Dear Commissioners:

RE: 2023 FREIGHTLINER M112

The County Caballo VF Department would like to utilize State Price Agreement to purchase a new freightliner pumper tender truck. The Fire Department was awarded the FY 23 NM Fire Protection Grant fund in the amount of $300,000.00 which needs to be encumbered by May 31, 2023. The department is using some of their Capital funds to offset the remaining balance.

Based on discussion with the County Manager and our Fire Emergency Services, a determination was issued, to move forward with the SPA purchase. We were able to utilize the **State Price Agreement #90-00000-19-00063**. Please see attached documentation.

I am requesting our County Commission to approve the purchase of the new Pumper/Tender and allow me to move forward with this procurement. Thank you.

Please, see attached:

Department Capital Fund 413-80 Balance $175275.00
State Fund 500-80 Balance $300,000.00
Total Balance: $475,275.00

Respectively,

Jocelyn Holguin
Chief Procurement Officer

FILE COPY

COUNTY OF SIERRA
CABALLO FIRE DEPARTMENT
RAY MULLINS, CHIEF
1712 N. DATE ST.SUITE D
TRUTH OR CONSEQUENCES NM 87901

County Department: EMERGENCY SERVICES

Requester: RYAN W - ESA ESA

Requisition Number: 6091 PO Number:

Vendor Number: 5462

Date: 3/14/23

REQUISITION

Price Each	Quantity	Line Item Number	Description of Item or Service	TOTAL
175275.00	1.00	413-80-2900	2023 FREIGHTLINER M112	175275.00
300000.00	1.00	500-80-2105	2023 FREIGHLINER M112	300000.00
			3000 GALLON PUMPER/TENDER	
			COMBINED WITH BUDGET & STATE	
			STATE PRICE AGREEMENT	
			#90-00000-19-00063	
			SEE ATTACHED:	
		COUNTY MANAGER	AGENDA AGREEMENT: 3/21/2023	
		ELECTRONIC APPROVAL		
		DATE:		
			Total this Page	475275.00

RECEIVED
MAR 15 2023
BY

FILE COPY

411 EQUIPMENT
Name Of Supplier

Notices.

Any notice required to be given to either party by this Agreement shall be in writing and shall be delivered in person, by courier service or by U.S. mail, either first class or certified, return receipt requested, postage prepaid, as follows:

To: County of Sierra

Jocelyn Holguin, Chief Procurement Officer
1712 N. Date Street Suite D
Truth or Consequences, NM 87901

To the Contractor:

411 EQUIPMENT, LLC
1815 4th Street NW
Albuquerque, NM 87102

Phone: 505.280.9143

Contact: Pete Marquez, Jr., Owner

SPA #90-0000-19-00063

IN WITNESS WHEREOF, the parties have executed this Agreement as of the date of signature by the County Chief Procurement Officer below:

By: _____ Date: _____
Amber Vaughn, County Manager

BOARD OF COUNTY COMMISSIONERS

APPROVED, ADOPTED AND PASSED on this 21st day of March 2023.

_____

_____
Travis Day, Commissioner Chair

_____
James E. Paxon, Vice- Chair

_____
Hank Hopkins, Commissioner

Attest:

_____
Shelly Trujillo
Sierra County Clerk

Sierra County Chief Procurement Officer:

By: _____ Date: _____
Jocelyn Holguin, CPO
Sierra County

411 Equipment, LLC
1815 4th Street NW, Albuquerque, NM 87102
(505) 280-9143 Phone

January 24, 2023

Sierra County
C/O Caballo Fire Department
Chief Ray Mullins

Dear Chief Mullins:

I would like to offer the Fire Department a proposal for a New Model Year 2023 NFPA 1901 Compliant 3000 Gallon Pumper Tanker mounted on a 2 door Freightliner M112 chassis via our CES Contract 2020-31B-411. The price of the unit with equipment as specified on the attached specifications would be $519,475.00. This price includes delivery, training, and the CES fee which will be paid by 411 Equipment.

Base Model CES-29		$448,890.00
Zico Electric Portable Tank Rack		8,695.00
Zico Aluminum Cover Painted		2,992.00
Swivel Dump Chute		3,595.00
Add Four (4) Wheel Compartments	$693.00	2,772.00
4" Rear Tank Fill		3,826.00
Four (4) Adjustable Shelves	$807.00	3,228.00
Rear Directional Light		2,107.00
Booster Reel		4,570.00
Loose Equipment as per attached list		13,600.00
Subtotal		$494,275.00
Discount		$ -19,000.00
Total		$475,275.00

Enclosed you will find a copy of our CES contract and price schedules. This proposal is valid for 30 days. The discount above exceeds the 2% discount required by CES. 411 Equipment will pay the $2,000.00 administrative fee.

Please give me a call if you have any questions.

Thank you for the opportunity,

Digitally signed by Pete Marquez Jr
Date: 2023.01.30 15:41:03 -07'00'

Pete Marquez, Jr.
Owner/GM

RECEIVED
MAR 15 2023
BY:

PURCHASE ORDER #

411 Equipment, LLC
1815 4th Street NW, Albuquerque, NM 87102
(505) 280-9143 Phone

LOOSE EQUIPMENT LIST

Sixteen (16) 2.5" x 50' attack hoses with 2.5" NH threads
Eight (8) 1.75" x 50' attack hoses with 1.5" NH threads
Two (2) 6" x 10' Hard Suctions Hoses
Barrel Strainer

DocuSign Envelope ID: 971E8364-A0A6-4B34-85C2-1A8DF864C96C

State of New Mexico
General Services Department
Purchasing Division

Statewide Price Agreement Amendment

Awarded Vendor: **19 Vendors**

Number: **90-00000-19-00063**

Amendment No.: **Nine**

Term: **July 29, 2019 – March 8, 2023**

Ship To: **All State of New Mexico agencies, commissions, institutions, political subdivisions and local public bodies allowed by law.**
Invoice: **As Requested**

Procurement Specialist: **Tami Concha** JC

Telephone No.: **505-660-3671**

Email: **Tami.Concha@gsd.nm.gov**

Title: **Highway & Off Road Heavy Equipment and Truck Repairs (Parts & Labor)**

This amendment is to be attached to the respective Price Agreement and become a part thereof.

Statewide Price Agreement 31-00000-22-00009 has been completed and issued to replace Statewide Price Agreements 90-00000-19-00063 and 91-00000-19-00063.

This amendment is issued to cancel the above referenced Price Agreement in its entirety effective March 8, 2023.

Accepted for the State of New Mexico

Valerie Paulk
Acting New Mexico State Purchasing Agent

Date: 2/6/2023

DocuSign Envelope ID: 6239E142-064D-4F1C-9851-C4725ABDFFC8

State of New Mexico
General Services Department
Purchasing Division
Statewide Price Agreement Amendment

Awarded Vendor:
19 Vendors

Number: **90-00000-19-00063**

Amendment No.: **Six**

Term: **July 29, 2019 – July 28, 2023**

Ship To:
All State of New Mexico agencies, commissions, institutions, political subdivisions and local public bodies allowed by law.

Invoice:
As Requested

Procurement Specialist: **Tami Concha** JC

Telephone No.: **505-660-3671**

Email: **Tami.Concha@state.nm.us**

Title: **Highway & Off Road Heavy Equipment and Truck Repairs (Parts & Labor)**

This amendment is to be attached to the respective Price Agreement and become a part thereof.

In accordance with Price Agreement provisions, and by mutual agreement of all parties, this Price Agreement is extended from July 29, 2022 to July 28, 2023 at the same price, terms and conditions, for the following Vendors:

(AB) Bruckner Truck Sales Inc.
(AC) Clark Truck Equipment Co, Inc.
(AD) Construction Truck Equipment
(AF) Desert Greens Equipment Inc.
(AG) Discount Mobile Auto Glass
(AH) Don Chalmers Ford Inc.
(AI) FleetPride Inc.
(AJ) Power Equipment Company
(AK) Grants Auto & Truck Parts Inc.
(AL) Hal Burns Truck, RV & Equipment SVC
(AM) Inland Kenworth US, Inc.
(AN) McBrides Inc.
(AO) MCT INC.
(AP) 411 Equipment LLC;
(AQ) Performance Tool & Equipment
(AR) Pete's Equipment Repair, Inc.;
(AS) Roberts Truck Center of NM
(AT) San Loma Inc. dba West Fleet
(AU) Century Equipment Company

Update contact information for Vendor (AH) Don Chalmers Ford Inc.

From:	**To:**
(505) 897-2500	**(505) 890-2201**
cmchargue@donchalmersford.com	**astrebe@chalmersford.com**

Update Vendor ID, Name and email address for Vendor (AO) MCT INC.

From:	**To:**
0000046837	**0000135408**
MCT Industries Inc.	**MCT INC.**
mctind.serice@mct-ind.com	**tromero@mct-ind.com**

MM

Michelle Lujan Grisham
Governor

Kelly Hamilton
Deputy Cabinet Secretary

David Dye
Cabinet Secretary Designate

Carla Walton
Deputy Cabinet Secretary

Randy Varela
State Fire Marshal

DEPARTMENT OF HOMELAND SECURITY AND EMERGENCY MANAGEMENT

November 21, 2022

Sierra County Fire Chief
100 North Date Street, STE 13
T or C, NM 87901

Ref: FY 23 New Mexico Fire Protection Grant Council Award Notice

Dear Sierra County and Fire Chief,

Congratulations! Your grant application on behalf of the **Sierra County Fire Department** has been reviewed and an award has been granted.

Over 179 grant applications were submitted and over $42,709,554.70 million in needs were considered. The Fire Department has met the minimum requirements and is clearly addressing a critical need affecting the ISO fire protection classification. The equipment purchased with this grant shall meet the requirements of the latest Editions of NFPA.

A voucher or ACH deposit, in the amount of **$300,000.00** for the purchase of the approved project request, will be sent to your local governing body Treasurer, to include **$0.00** for **Stipends** after approval by this office of the submitted project specifications, on or near **November 21, 2022.**

The deadline to encumber the money by contract with the vendor is **May 31, 2023**. If the bid amount exceeds the awarded amount plus the required matching amount, the additional cost shall be the responsibility of the local government. If the specified equipment may be purchased for less than the grant amount, **the remaining money shall be returned to the grant fund**. All equipment purchased with grant funds must be inspected by this office upon receipt and the attached Project Close-Out Checklist completed and submitted immediately thereafter.

Failure to meet deadlines will result in the loss of funds. If you need additional time to complete your project, your request for an extension must be made in writing, explaining the need for additional time. Grant recipients also need the Council's written permission, to make changes to their projects. Project modifications must be requested in writing, and the modification shall not significantly alter the original purpose of the approved application. Extension and modification requests are reviewed on a case-by-case basis and are not automatically granted.

If further information is required, please contact Randy Varela, State Fire Marshal, at (505) 709-8150.

Sincerely,

Randy Varela
State Fire Marshal

Sincerely,

Robert Larranaga
Grant Council Chair

P.O. Box 27111 • Santa Fe • New Mexico • 87502
Office: 505-476-9600 • Fax: 505-476-9650

FY23 NEW MEXICO FIRE PROTECTION GRANT AWARD
PROJECT CLOSEOUT CHECKLIST

Upon completion of the funded project, this checklist must be submitted to the State Fire Marshal's Office, Fire Services Support Bureau.

COUNTY: Sierra

FUNDED PROJECT: **Apparatus**

AMOUNT AWARDED: **$300,000.00**

PROJECT CHECKLIST

Benchmark	**Deadline**	**Date**	**Name of SFMO Representative**
Project specifications submitted to State Fire Marshal's Office for Review/Approval	August 31, 2022	Submittal Date	Submitted to:
Approval from SFMO to proceed with project specifications		Approval Date	Approved by:
Funds Encumbered by Procurement Code	May 31, 2023	Encumbrance Date	Encumbrance Method Contract/Purchase Order #
Project Completed		Goods/Services Received Date	
SFMO Inspection		Requested Date	Requested of whom:
SFMO Inspection Completed		Inspection Date	**By Whom:**
SFMO Check of NFIRS Compliance			

DEPARTMENT		**AMOUNT**
Caballo	Apparatus	$300,000.00
TOTAL		**$300,000.00**

TABLE OF CONTENTS

TABLE OF CONTENTS i
BASE MODEL 1
TANKER SIDE MOUNT 3000 GALLON 1
Compliance 1
NFPA 1901 COMPLIANT 1
Badging 7
CHASSIS OPTIONS 7
CAB COLOR 7
ENGINE 7
ALUMINUM WHEELS 7
FREIGHTLINER M2 2 DOOR 7
PUMP MODULE OPTIONS 14
CROSSLAY PRECONNECTIONS 14
SIDE MOUNT PUMP MODULE 14
PLUMBING SYSTEM - DSD 1250 GPM 16
DIRECT TANK FILL-4" 25
Electric Primer 25
BODY OPTIONS 25
HOSEBED DIVIDER ADDITIONAL 25
ADJUSTABLE SHELF [Qty: 4] 26
HOSEBED DIVIDER 26
DUAL SCBA COMPARTMENTS 26
Hose allowance 26
Equipment allowance 26
SWIVEL REAR DUMP 26
FOLD-A-TANK COVER - PAINTED 27
ROLL UP DOORS 27
HOSEBED / CROSSLAY COVERS 28
LADDER STORAGE 28
HARD SUCTION STORAGE [Qty: 2] 28
WATER TANK 28
APPARATUS BODY 30
PORTABLE TANK STORAGE RACK 34
Stainless Fenderette 35
WARNING LIGHTS 35

WHELEN LIGHT BAR 35
REAR DIRECTION LIGHTBAR 35
EMERGENCY WARNING SYSTEM 35
Upper Zone B, C, & D: 35
Lower Zone A: 35
Lower Zone B&D: 35
Lower Zone C: 36
Siren Control Head 36
Siren Speaker 36
Back Up Alarm 36
Rear View Camera 36
12V ELECTRICAL 36
ELECTRICAL SYSTEM - VMUX 36
Electrical System 36
Multiplex System 37
Wiring 37
Wiring Protection 38
Wiring Connectors 38
NFPAA Required Testing of Electrical System 38
NFPA Required Documentation 39
Vehicle Data Recorder 39
Occupant Detection System 40
Electrical Connection Protection 40
Cab Control Console 40
Rocker Switch Panel 40
12-Volt Charger Port 41
Battery Switch 41
Auto Throttle 41
Hazard Light in Cab 41
Battery Charger 41
Shoreline Receptacle w/ Auto Eject 41
DOT Lighting 42
Rear Tail Light Assembly 42
Engine Compartment Light 42
Cab Step Lights 42
Under Body Lights 42
LED Intermediate Turn Signal Lighting 43

Intermediate Turn Signals 43
Compartment Lighting 43
LED Crosslay Flood Light 43
LED Hosebed Flood Light 43
REAR BODY SCENE / WORK LIGHTS 43
LOOSE EQUIPMENT 44
NFPA 1901 COMPLIANT EQUIPMENT 44
PAINT / GRAPHICS 44
BODY COLOR 44
STRIPING 44
CAB AND BODY STRIPE 44
REAR CHEVRON STRIPE 44
WARRANTY / STANDARD & EXTENDED 44
General 1 Year Warranty 44
Body Structural (Aluminum) Warranty 44
Electrical Warranty 45
Paint and Finish (FRP Panels) Warranty 45
SUPPORT, DELIVERY, INSPECTIONS AND MANUALS 45
Electronic Manuals 45

County of Sierra
Office of Administration
1712 N. Date Street
Truth or Consequences, New Mexico 87901
Phone 575-894-6215
Fax 575-894-9548

County Department: Caballo Fire Dept.

Purchase Order # :

Line Item Number: 413-80-2900 / 500-0-1066

Vendor Number: 5462

Date: March 9, 2023

REQUISITION

Item Number	Quantity	Description of Item or Service	Price Each	Line Item Number	TOTAL
	1	3,000 gallon pumper/tender	$175,275.00	413-80-2900	175,275.00
		2023 Freightliner M112			-
	1	3,000 gallon pumper/tender	$300,000.00	~~500-0-1066~~	########
		2023 Freightliner M112		500-80-2105	-
					-
					-
		Combined with Budget and State Funding			-
		via fire grant award of $300,000.00			-
					-
		Statewide Pric Agreement			-
		#90-00000-19-00063			-
		Commission Agenda: 3/21/2023			-
					-
					-
					-
					-
					-
			Total this Page		$ 475,275.00

RECEIVED
MAR 15 2023
BY:

If new vendor, provide address & phone # below if available.

411 Equipment, LLC
Name Of Supplier

PH:
FX:

Ray Mullins
Department Official

State of New Mexico

Shelly Trujillo
County Clerk
575-894-2840

Candace Chavez
County Treasurer
575-894-3524

Michael Huston
County Assessor
575-894-2589

Tom Pestak
Probate Judge
575-740-4900

SIERRA COUNTY
NEW MEXICO

Amber Vaughn
County Manager
1712 N. Date Street Suite D
Truth or Consequences, New Mexico 87901

County of Sierra

Travis Day
Commission Chari
575-894-6215

James Paxon
Commission Vice Chair
575-894-6215

Hank Hopkins
Commissioner
575-894-6215

Joshua Baker
Sheriff
575-894-9150

HGAC BUY BETWEEN MES
AND THE COUNTY OF SIERRA

March 15, 2023

Dear Commissioners:

RE: AIR-PAK/SCBE GEAR- HGAC BUY

The County Hillsboro VF Department would like to utilize HGAC BUY to purchase fire equipment and materials, which will help replace and update old materials, to help maintain their ISO ratings. The Fire department will be utilizing their budgeted funds for this purchase.

Based on discussion with the County Manager and our Fire Emergency Services, a determination was issued, to move forward with the HGAC BUY purchase. We were able to utilize the **Contract Agreement #EE08-19**. Please see attached documentation.

I am requesting our County Commission to approve the purchase of the new gear and allow me to move forward with this procurement. Thank you.

Please, see attached:

Department Fund 407-75 Total Balance $48,896.63

Respectively,

Jocelyn Holguin
Chief Procurement Officer

FILE COPY

COUNTY OF SIERRA
HILLSBORO FIRE DEPARTMENT
ATTENTION: TREVOR ROBERTS
HIGHWAY 27 AND 152
HILLSBORO, NM 88042

County Department: EMERGENCY SERVICES

Requester: RYAN W - ESA ESA

Requisition Number: 6090 PO Number:

Vendor Number: 4729

Date: 3/14/23

REQUISITION

Price Each	Quantity	Line Item Number	Description of Item or Service	TOTAL
8709.67	4.00	407-75-2900	AIR-PAK X3 PRO SCBA W/CGA	34838.68
14057.95	1.00	407-75-2999	CYLINDERS, MASKS, BAGS	14057.95
			HGAC BUY	
			ITEMIZED QUOTE/CONTRACT ATTACHED	
			CONTRACT NO. EE08-19	
			SEE ATTCHED:	
			COMMISSION AGENDA: 3/21/2023	
		COUNTY MANAGER		
		ELECTRONIC APPROVAL		
		DATE:	RECEIVED	
			MAR 15 2023	
			BY:	
			Total this Page	48896.63

FILE COPY

MES
Name Of Supplier

Notices.

Any notice required to be given to either party by this Agreement shall be in writing and shall be delivered in person, by courier service or by U.S. mail, either first class or certified, return receipt requested, postage prepaid, as follows:

To: County of Sierra

Jocelyn Holguin, Chief Procurement Officer
1712 N. Date Street Suite D
Truth or Consequences, NM 87901

To the Contractor:

MUNICIPAL EMERGENCY SERVICE
PO Box 856892
Minneapolis, MN 55485

Phone: 800-784-0404

Contact: Janet Cardenas

Contract #EE08-19

IN WITNESS WHEREOF, the parties have executed this Agreement as of the date of signature by the County Chief Procurement Officer below:

By: _____ Date: _____
Amber Vaughn, County Manager

BOARD OF COUNTY COMMISSIONERS

APPROVED, ADOPTED AND PASSED on this 21st day of March 2023.

_____

_____
Travis Day, Commissioner Chair

_____
James E. Paxon, Vice- Chair

_____
Hank Hopkins, Commissioner

Attest:

_____
Shelly Trujillo
Sierra County Clerk

Sierra County Chief Procurement Officer:

By: _____ Date: _____
Jocelyn Holguin, CPO
Sierra County

HGACBuy	CONTRACT PRICING WORKSHEET For Catalog & Price Sheet Type Purchases	Contract No.:	EE08-19	Date Prepared:	2/14/2023

This Worksheet is prepared by Contractor and given to End User. If a PO is issued, both documents MUST be faxed to H-GAC @ 713-993-4548. Therefore please type or print legibly.

Buying Agency:	Sierra County - Hillsboro FD	Contractor:	Municipal Emergency Services
Contact Person:	Chief Tom Lander	Prepared By:	Janet Cardenas
Phone:	575-494-2549	Phone:	1-800-784-0404
Fax:		Fax:	281-442-9199
Email:	hvfdchief102@gmail.com	Email:	jcardenas@mesfire.com

Catalog / Price Sheet Name:	Scott
General Description of Product/ Product Code	EE19ADA

A. Catalog / Price Sheet Items being purchased - Itemize Below - Attach Additional Sheet If Necessary

Quan	Description	Unit Pr	Total
4	X8814025305303 Air-Pak X3 Pro SCBA (2018 Edition) with CGA, Parachute Buckles, 4.5, Standard, No Accessory Pouch, E-Z Flo+ Regulator with Quick Disconnect Hose (Rectus-type fittings), Universal EBSS, None, No, PakTracker, No Case, 1 SCBA Per BoxHGAC Pricing 15% Off List Price of $10,246.67	$8,709.67	$34,838.68
11	804722-01 CYL&VLV ASSY,CARB,45MIN,4500 HGAC Pricing 15% Off List Price of $1,802.83	$1,532.41	$16,856.51
3	201215-01 AV-3000 HT (S), KVLR HGAC Pricing 15% Off List Price of $450.47	$382.90	$1,148.70
1	201215-03 AV-3000 HT (L), KVLR HGAC Pricing 15% Off List Price of $450.47	$382.90	$382.90
		Total From Other Sheets, If Any:	
		Subtotal A:	$53,226.79

B. Unpublished Options, Accessory or Service items - Itemize Below - Attach Additional Sheet If Necessary
(Note: Unpublished Items are any which were not submitted and priced in contractor's bid.)

Quan	Description	Unit Pr	Total
4	MB3-100 S.M. Smith Co. Black Fleece Mask Bag	$25.50	$102.00
		Total From Other Sheets, If Any:	
		Subtotal B:	$102.00

Check: Total cost of Unpublished Options (B) cannot exceed 25% of the total of the Base Unit Price plus Published Options.	For this transaction the percentage is:	0%

C. Trade-Ins / Special Discounts / Other Allowances / Freight / Installation / Miscellaneous Charges

SPECIAL DISCOUNT	PURCHASE ORDER #	-$4,432.16
	Subtotal C:	-$4,432.16

RECEIVED
MAR 15 2023
BY:

Delivery Date:	90-120 DAYS	D. Total Purchase Price (A+B+C):	$48,896.63

DocuSign Envelope ID: 4DDDC73B-359C-4362-BC7D-0E8E19486C58

AMENDMENT No. 2 to CONTRACT No. EE08-19
For
Emergency Medical & Rescue Equipment
Between
HOUSTON-GALVESTON AREA COUNCIL
And
Municipal Emergency Services Inc

THIS AMENDMENT modifies the above referenced Contract as follows:

This contract is extended through July 31, 2023 Midnight CT.

Unless otherwise noted, this amendment goes into effect on the date signed by **H-GAC.** All other terms and conditions of this Contract shall remain unchanged and in full force and effect.

IN WITNESS WHEREOF, the parties have caused this Agreement to be executed by their respective duly authorized representatives.

Signed for **Houston-Galveston Area Council,**
Houston, Texas

DocuSigned by:
82EC270D5061423...
Chuck Wemple, Executive Director
Date: 7/29/2022

Signed for: **Municipal Emergency Services Inc**

DocuSigned by:
David Mooney
820839EC2CDE4B0...
Printed Name & Title: David Mooney Vice President, Western Zo
Date: 7/25/2022

H-GAC

Houston-Galveston Area Council
P.O. Box 22777 · 3555 Timmons · Houston, Texas 77227-2777

GENERAL PROVISIONS

This Agreement is made and entered into, by and between the Houston-Galveston Area Council hereinafter referred to as H-GAC having its principal place of business at 3555 Timmons Lane, Suite 120, Houston, Texas 77027 and Municipal Emergency Services Inc., hereinafter referred to as the Contractor, having its principal place of business at 7 Poverty Road 85 H Bennett Square, Southbury, CT 06488.

WITNESSETH:

WHEREAS, H-GAC hereby engages the Contractor to perform certain services in accordance with the specifications of the Agreement; and

WHEREAS, the Contractor has agreed to perform such services in accordance with the specifications of the Agreement;

NOW, THEREFORE, H-GAC and the Contractor do hereby agree as follows:

ARTICLE 1: LEGAL AUTHORITY

The Contractor warrants and assures H-GAC that it possesses adequate legal authority to enter into this Agreement. The Contractor's governing body, where applicable, has authorized the signatory official(s) to enter into this Agreement and bind the Contractor to the terms of this Agreement and any subsequent amendments hereto.

ARTICLE 2: APPLICABLE LAWS

The Contractor agrees to conduct all activities under this Agreement in accordance with all applicable rules, regulations, directives, standards, ordinances, and laws, in effect or promulgated during the term of this Agreement, including without limitation, workers' compensation laws, minimum and maximum salary and wage statutes and regulations, and licensing laws and regulations. When required, the Contractor shall furnish H-GAC with satisfactory proof of its compliance therewith.

ARTICLE 3: INDEPENDENT CONTRACTOR

The execution of this Agreement and the rendering of services prescribed by this Agreement do not change the independent status of H-GAC or the Contractor. No provision of this Agreement or act of H-GAC in performance of the Agreement shall be construed as making the Contractor the agent, servant or employee of H-GAC, the State of Texas or the United States Government. Employees of the Contractor are subject to the exclusive control and supervision of the Contractor. The Contractor is solely responsible for employee related disputes and discrepancies, including employee payrolls and any claims arising therefrom.

ARTICLE 4: WHOLE AGREEMENT

The General Provisions, Special Provisions, and Attachments, as provided herein, constitute the complete Agreement ("Agreement") between the parties hereto, and supersede any and all oral and written agreements between the parties relating to matters herein. Except as otherwise provided herein, this Agreement cannot be modified without written consent of the parties.

ARTICLE 5: SCOPE OF SERVICES
The services to be performed by the Contractor are outlined in an Attachment to this Agreement.

ARTICLE 6: PERFORMANCE PERIOD
This Agreement shall be performed during the period which begins Aug 01 2019 and ends Jul 31 2021. All services under this Agreement must be rendered within this performance period, unless directly specified under a written change or extension provisioned under Article 15, which shall be fully executed by both parties to this Agreement.

ARTICLE 7: PAYMENT OR FUNDING
Payment provisions under this Agreement are outlined in the Special Provisions.

ARTICLE 8: REPORTING REQUIREMENTS
If the Contractor fails to submit to H-GAC in a timely and satisfactory manner any report required by this Agreement, or otherwise fails to satisfactorily render performances hereunder, H-GAC may terminate this agreement with notice as identified in Article 16 of these General Provisions. H-GAC has final determination of the adequacy of performance and reporting by Contractor. Termination of this agreement for failure to perform may affect Contractor's ability to participate in future opportunities with H-GAC. The Contractor's failure to timely submit any report may also be considered cause for termination of this Agreement.

Any additional reporting requirements shall be set forth in the Special Provisions of this Agreement.

ARTICLE 9: INSURANCE
Contractor shall maintain insurance coverage for work performed or services rendered under this Agreement as outlined and defined in the attached Special Provisions.

ARTICLE 10: SUBCONTRACTS and ASSIGNMENTS
Except as may be set forth in the Special Provisions, the Contractor agrees not to subcontract, assign, transfer, convey, sublet or otherwise dispose of this Agreement or any right, title, obligation or interest it may have therein to any third party without prior written approval of H-GAC. The Contractor acknowledges that H-GAC is not liable to any subcontractor or assignee of the Contractor. The Contractor shall ensure that the performance rendered under all subcontracts shall result in compliance with all the terms and provisions of this Agreement as if the performance rendered was rendered by the Contractor. Contractor shall give all required notices, and comply with all laws and regulations applicable to furnishing and performance of the work. Except where otherwise expressly required by applicable law or regulation, H-GAC shall not be responsible for monitoring Contractor's compliance, or that of Contractor's subcontractors, with any laws or regulations.

ARTICLE 11: AUDIT
Notwithstanding any other audit requirement, H-GAC reserves the right to conduct or cause to be conducted an independent audit of any transaction under this Agreement, such audit may be performed by the H-GAC local government audit staff, a certified public accountant firm, or other auditors designated by H-GAC and will be conducted in accordance with applicable professional standards and practices. The Contractor understands and agrees that the Contractor shall be liable to the H-GAC for any findings that result in monetary obligations to H-GAC.

ARTICLE 12: EXAMINATION OF RECORDS
The Contractor shall maintain during the course of the work complete and accurate records of all of the Contractor's costs and documentation of items which are chargeable to H-GAC under this Agreement. H-GAC, through its staff or designated public accounting firm, the State of Texas, and United States

Government, shall have the right at any reasonable time to inspect, copy and audit those records on or off the premises by authorized representatives of its own or any public accounting firm selected by H-GAC. The right of access to records is not limited to the required retention period, but shall last as long as the records are retained. Failure to provide access to records may be cause for termination of the Agreement. The records to be thus maintained and retained by the Contractor shall include (without limitation): (1) personnel and payroll records, including social security numbers and labor classifications, accounting for total time distribution of the Contractor's employees working full or part time on the work, as well as cancelled payroll checks, signed receipts for payroll payments in cash, or other evidence of disbursement of payroll payments; (2) invoices for purchases, receiving and issuing documents, and all other unit inventory records for the Contractor's stocks or capital items; and (3) paid invoices and cancelled checks for materials purchased and for subcontractors' and any other third parties' charges.

The Contractor further agrees that the examination of records outlined in this article shall be included in all subcontractor or third-party agreements.

ARTICLE 13: RETENTION OF RECORDS

The Contractor and its subcontractors shall maintain all records pertinent to this Agreement, and all other financial, statistical, property, participant records, and supporting documentation for a period of no less than seven (7) years from the later of the date of acceptance of the final payment or until all audit findings have been resolved. If any litigation, claim, negotiation, audit or other action involving the records has been started before the expiration of the retention period, the records shall be retained until completion of the action and resolution of all issues which arise from it, or until the end of the seven (7) years, whichever is later, and until any outstanding litigation, audit, or claim has been fully resolved.

ARTICLE 14: CHANGES AND AMENDMENTS

A. Any alterations, additions, or deletions to the terms of this Agreement, which are required by changes in federal or state law or by regulations, are automatically incorporated without written amendment hereto, and shall become effective on the date designated by such law or by regulation.

B. To ensure the legal and effective performance of this Agreement, both parties agree that any amendment that affects the performance under this Agreement must be mutually agreed upon and that all such amendments must be in writing. After a period of no less than 30 days subsequent to written notice, unless sooner implementation is required by law, such amendments shall have the effect of qualifying the terms of this Agreement and shall be binding upon the parties as if written herein.

ARTICLE 15: TERMINATION PROCEDURES

The Contractor acknowledges that this Agreement may be terminated for Convenience or Default.

A. *Convenience*

H-GAC may terminate this Agreement at any time, in whole or in part, with or without cause, whenever H-GAC determines that for any reason such termination is in the best interest of H-GAC, by providing written notice by certified mail to the Contractor. Upon receipt of notice of termination, all services hereunder of the Contractor and its employees and subcontractors shall cease to the extent specified in the notice of termination.

The Contractor may cancel or terminate this Agreement upon submission of thirty (30) days written notice, presented to H-GAC via certified mail. The Contractor may not give notice of cancellation after it has received notice of default from H-GAC.

B. *Default*

H-GAC may, by written notice of default to the Contractor, terminate the whole or any part of the Agreement, in any one of the following circumstances:

(1) If the Contractor fails to perform the services herein specified within the time specified herein or any extension thereof; or

(2) If the Contractor fails to perform any of the other provisions of this Agreement for any reason whatsoever, or so fails to make progress or otherwise violates the Agreements that completion of services herein specified within the Agreement term is significantly endangered, and in either of these two instances does not cure such failure within a period often (10) days (or such longer period of time as may be authorized by H-GAC in writing) after receiving written notice by certified mail of default from H-GAC.

ARTICLE 16: SEVERABILITY

H-GAC and Contractor agree that should any provision of this Agreement be determined to be invalid or unenforceable, such determination shall not affect any other term of this Agreement, which shall continue in full force and effect.

ARTICLE 17: FORCE MAJEURE

To the extent that either party to this Agreement shall be wholly or partially prevented from the performance of any obligation or duty placed on such party by reason of or through strikes, stoppage of labor, riot, fire, flood, acts of war, insurrection, accident, order of any court, act of God, or specific cause reasonably beyond the party's control and not attributable to its neglect or nonfeasance, in such event, the time for the performance of such obligation or duty shall be suspended until such disability to perform is removed. Determination of force majeure shall rest solely with H-GAC.

ARTICLE 18: CONFLICT OF INTEREST

No officer, member or employee of the Contractor or subcontractor, no member of the governing body of the Contractor, and no other public officials of the Contractor who exercise any functions or responsibilities in the review or Contractor approval of this Agreement, shall participate in any decision relating to this Agreement which affects his or her personal interest, or shall have any personal or pecuniary interest, direct or indirect, in this Agreement.

ARTICLE 19: FEDERAL COMPLIANCE

Contractor agrees to comply with all federal statutes relating to nondiscrimination, labor standards, and environmental compliance. Additionally, for work to be performed under the Agreement or subcontract thereof, including procurement of materials or leases of equipment, Contractor shall notify each potential subcontractor or supplier of the Contractor's federal compliance obligations. These may include, but are not limited to: (a) Title VI of the Civil Rights Act of 1964 (P.L. 88-352) which prohibits discrimination on the basis of race, color or national origin; (b) Title IX of the Education Amendments of 1972, as amended (20 U.S.C. §§ 1681-1683, and 1685-1686), which prohibits discrimination on the basis of sex; (c) the Fair Labor Standards Act of 1938 (29 USC 676 et. seq.), (d) Section 504 of the Rehabilitation Act of 1973, as amended (29 U.S.C. § 794), which prohibits discrimination on the basis of handicaps and the Americans with Disabilities Act of 1990; (e) the Age Discrimination in Employment Act of 1967 (29 USC 621 et. seq.) and the Age Discrimination Act of 1974, as amended (42 U.S.C. §§ 6101-6107), which prohibits discrimination on the basis of age; (f) the Drug Abuse Office and Treatment Act of 1972 (P.L. 92-255), as amended, relating to nondiscrimination on the basis of drug abuse; (g) the Comprehensive Alcohol Abuse and Alcoholism Prevention, Treatment and Rehabilitation Act of 1970 (P.L. 91-616), as amended, relating to the nondiscrimination on the basis of alcohol abuse or alcoholism; (h) §§ 523 and 527 of the Public Health Service Act of 1912 (42 U.S.C. 290 dd-3 and 290 ee-3), as amended, relating to confidentiality of alcohol and drug abuse patient records; (i) Title VIII of the Civil Rights Act of 1968 (42 U.S.C. § 3601 et seq.), as amended, relating to nondiscrimination in the sale, rental or financing of housing; (j) any other nondiscrimination provisions in any specific statute(s)

applicable to any Federal funding for this Agreement; (k) the requirements of any other nondiscrimination statute(s) which may apply to this Agreement; (l) applicable provisions of the Clean Air Act (42 U.S.C. §7401 et seq.), the Federal Water Pollution Control Act, as amended (33 U.S.C. §1251 et seq.), Section 508 of the Clean Water Act (33 U.S.C. 1368), Executive Order 11738, and the Environmental Protection Agency regulations at 40 CPR Part 15; (m) applicable provisions of the Davis- Bacon Act (40 U.S.C. 276a - 276a-7), the Copeland Act (40 U.S.C. 276c), and the Contract Work Hours and Safety Standards Act (40 U.S.C. 327-332), as set forth in Department of Labor Regulations at 20 CPR 5.5a; (n) the mandatory standards and policies relating to energy efficiency which are contained in the state energy conservation plan issued in compliance with the Energy Policy and Conservation Act (P.L. 94-163).

ARTICLE 20: CRIMINAL PROVISIONS AND SANCTIONS

The Contractor agrees to perform the Agreement in conformance with safeguards against fraud and abuse as set forth by the H-GAC, the State of Texas, and the acts and regulations of any related state or federal agency. The Contractor agrees to promptly notify H-GAC of any actual or suspected fraud, abuse, or other criminal activity through the filing of a written report within twenty-four (24) hours of knowledge thereof. Contractor shall notify H-GAC of any accident or incident requiring medical attention arising from its activities under this Agreement within twenty-four (24) hours of such occurrence. Theft or willful damage to property on loan to the Contractor from H-GAC, if any, shall be reported to local law enforcement agencies and H-GAC within two (2) hours of discovery of any such act.

The Contractor further agrees to cooperate fully with H-GAC, local law enforcement agencies, the State of Texas, the Federal Bureau of Investigation and any other duly authorized investigative unit, in carrying out a full investigation of all such incidents.

The Contractor shall notify H-GAC of the threat of lawsuit or of any actual suit filed against the Contractor pertaining to this Agreement or which would adversely affect the Contractor's ability to perform services under this Agreement.

ARTICLE 21: INDEMNIFICATION AND RECOVERY

H-GAC's liability under this Agreement, whether for breach of contract, warranty, negligence, strict liability, in tort or otherwise, is limited to its order processing charge. In no event will H-GAC be liable for any loss of use, loss of time, inconvenience, commercial loss, lost profits or savings or other incidental, special or consequential damages to the full extent such use may be disclaimed by law. Contractor agrees, to the extent permitted by law, to defend and hold harmless H-GAC, its board members, officers, agents, officials, employees and indemnities from any and all claims, costs, expenses (including reasonable attorney fees), actions, causes of action, judgements, and liens arising as a result of Contractor's negligent act or omission under this Agreement. Contractor shall notifiy H-GAC of the threat of lawsuit or of any actual suit filed against Contractor relating to this Agreement.

ARTICLE 22: LIMITATION OF CONTRACTOR'S LIABILITY

Except as specified in any separate writing between the Contractor and an END USER, Contractor's total liability under this Agreement, whether for breach of contract, warranty, negligence, strict liability, in tort or otherwise, but excluding its obligation to indemnify H-GAC, is limited to the price of the particular products/services sold hereunder, and Contractor agrees either to refund the purchase price or to repair or replace product(s) that are not as warranted. In no event will Contractor be liable for any loss of use, loss of time, inconvenience, commercial loss, loss of profits or savings or other incidental, special or consequential damages to the full extent such use may be disclaimed by law. Contractor understands and agrees that it shall be liable to repay and shall repay upon demand to

END USER any amounts determined by H-GAC, its independent auditors, or any agency of State or Federal government to have been paid in violation of the terms of this Agreement.

ARTICLE 23: TITLES NOT RESTRICTIVE

The titles assigned to the various Articles of this Agreement are for convenience only. Titles shall not be considered restrictive of the subject matter of any Article, or part of this Agreement.

ARTICLE 24: JOINT WORK PRODUCT

This Agreement is the joint work product of H-GAC and the Contractor. This Agreement has been negotiated by H-GAC and the Contractor and their respective counsel and shall be fairly interpreted in accordance with its terms and, in the event of any ambiguities, no inferences shall be drawn against any party.

ARTICLE 25: DISPUTES

All disputes concerning questions of fact or of law arising under this Agreement, which are not addressed within the Whole Agreement as defined pursuant to Article 4 hereof, shall be decided by the Executive Director of H-GAC or his designee, who shall reduce his decision to writing and provide notice thereof to the Contractor. The decision of the Executive Director or his designee shall be final and conclusive unless, within thirty (30) days from the date of receipt of such notice, the Contractor requests a rehearing from the Executive Director of H-GAC. In connection with any rehearing under this Article, the Contractor shall be afforded an opportunity to be heard and offer evidence in support of its position. The decision of the Executive Director after any such rehearing shall be final and conclusive. The Contractor may, if it elects to do so, appeal the final and conclusive decision of the Executive Director to a court of competent jurisdiction. Pending final decision of a dispute hereunder, the Contractor shall proceed diligently with the performance of the Agreement and in accordance with H- GAC's final decision.

ARTICLE 26: CHOICE OF LAW: VENUE

This Agreement shall be governed by the laws of the State of Texas. Venue and jurisdiction of any suit or cause of action arising under or in connection with the Agreement shall lie exclusively in Harris County, Texas. Disputes between END USER and Contractor are to be resolved in accordance with the law and venue rules of the state of purchase. Contractor shall immediately notify H-GAC of such disputes.

ARTICLE 27: ORDER OF PRIORITY

In the case of any conflict between or within this Agreement, the following order of priority shall be utilized: 1) General Provisions, 2) Special Provisions, 3) Scope of Work, and, 4) Other Attachments.

SIGNATURES:
H-GAC and the Contractor have read, agreed, and executed the whole Agreement as of the date first written above, as accepted by:

Municipal Emergency Services Inc.

Signature Brent Allen
D578C4E659994C2

Name Brent Allen

Title Vice President

Date 7/15/2019

H-GAC

DocuSigned by:
Signature
82EC270D5D61423

Name Chuck Wemple

Title Executive Director

Date 6/19/2019

H-GAC

Houston-Galveston Area Council
P.O. Box 22777 · 3555 Timmons · Houston, Texas 77227-2777

SPECIAL PROVISIONS

Incorporated by attachment, as part of the whole agreement, H-GAC and the Contractor do, hereby agree to the Special Provisions as follows:

ARTICLE 1: BIDS/PROPOSALS INCORPORATED

In addition to the whole Agreement, the following documents listed in order of priority are incorporated into the Agreement by reference: Bid/Proposal Specifications and Contractor's Response to the Bid/Proposal.

ARTICLE 2: END USER AGREEMENTS ("EUA")

H-GAC acknowledges that the **END USER** may choose to enter into an End User Agreement ("EUA) with the **Contractor** through this Agreement, and that the term of the EUA may exceed the term of the current **H-GAC** Agreement. **H-GAC's** acknowledgement is not an endorsement or approval of the End User Agreement's terms and conditions. **Contractor** agrees not to offer, agree to or accept from the **END USER**, any terms or conditions that conflict with those in **Contractor's** Agreement with **H-GAC.** Contractor affirms that termination of its Agreement with H-GAC for any reason shall not result in the termination of any underlying EUA, which shall in each instance, continue pursuant to the EUA's stated terms and duration. Pursuant to the terms of this Agreement, termination of this Agreement will disallow the **Contractor** from entering into any new EUA with **END USERS.** Applicable **H-GAC** order processing charges will be due and payable to **H-GAC** on any EUAs, surviving termination of this Agreement between **H-GAC** and **Contractor.**

ARTICLE 3: MOST FAVORED CUSTOMER CLAUSE

Contractor shall provide its most favorable pricing and terms to H-GAC. If at any time during this Agreement, Contractor develops a regularly followed standard procedure of entering into agreements with other governmental customers within the State of Texas, and offers the same or substantially the same products/services offered to **H-GAC** on a basis that provides prices, warranties, benefits, and or terms more favorable than those provided to **H-GAC**, **Contractor** shall notify **H-GAC** within ten (10) business days thereafter, and this Agreement shall be deemed to be automatically retroactively amended, to the effective date of Contractor's most favorable past agreement with another entity. **Contractor** shall provide the same prices, warranties, benefits, or terms to **H-GAC** and its END USER as provided in its most favorable past agreement. H-GAC shall have the right and option at any time to decline to accept any such change, in which case the amendment shall be deemed null and void. If **Contractor** claims that a more favorable price, warranty, benefit, or term that was charged or offered to another entity during the term of this Agreement, does not constitute more favorable treatment, than **Contractor** shall, within ten (10) business days, notify **H-GAC** in writing, setting forth the detailed reasons **Contractor** believes the aforesaid offer is not in fact most favored treatment. **H-GAC**, after due consideration of Contractor's written explanation, may decline to accept such explanation and thereupon this Agreement between **H-GAC** and **Contractor** shall be automatically amended, effective retroactively, to the effective date of the most favored agreement, to provide the same prices, warranties,

benefits, or terms to H-GAC and the END USER.
EXCEPTION: *This clause shall not be applicable to prices and price adjustments offered by a bidder, Proposer or contractor, which are not within bidder's/proposer's control [example; a manufacturer's bid concession], or to any prices offered to the Federal Government and its agencies.*

ARTICLE 4: PARTY LIABILITY

Contractor's total liability under this Agreement, whether for breach of contract, warranty, negligence, strict liability, in tort or otherwise, is limited to the price of the particular products/services sold hereunder. Contractor agrees either to refund the purchase price or to repair or replace product(s) that are not as warranted. Contractor accepts liability to repay, and shall repay upon demand to END USER, any amounts determined by H-GAC, its independent auditors, or any state or federal agency, to have been paid in violation of the terms of this Agreement.

ARTICLE 5: GOVERNING LAW & VENUE

Contractor and H-GAC agree that Contractor will make every reasonable effort to resolve disputes with the **END USER** in accord with the law and venue rules of the state of purchase. **Contractor** shall immediately notify **H-GAC** of such disputes.

ARTICLE 6: SALES AND ORDER PROCESSING CHARGE

Contractor shall sell its products to **END USERS** based on the pricing and terms of this Agreement. **H-GAC** will invoice **Contractor** for the applicable order processing charge when H-GAC receives notification of an END USER order. **Contractor shall remit to H-GAC** the full amount of the applicable order processing charge, after delivery of any product or service and subsequent END USER acceptance. Payment of the Order Processing Charge shall be remitted from Contractor to H-GAC, within thirty (30) calendar days or ten (10) business days after receipt of an END USER's payment, whichever comes first, notwithstanding Contractor's receipt of invoice. For sales made by **Contractor** based on this Agreement, including sales to entities without Interlocal Agreements, **Contractor** shall pay the applicable order processing charges to **H-GAC**. Further, **Contractor** agrees to encourage entities who are not members of H-GAC's Cooperative Purchasing Program to execute an **H-GAC** Interlocal Agreement. **H-GAC** reserves the right to take appropriate actions including, but not limited to, Agreement termination if **Contractor** fails to promptly remit the appropriate order processing charge to H-GAC. In no event shall **H-GAC** have any liability to **Contractor** for any goods or services an **END USER** procures from **Contractor.** At all times, **Contractor** shall remain liable to pay to **H-GAC** any order processing charges on any portion of the Agreement actually performed, and for which compensation was received by **Contractor.**

ARTICLE 7: LIQUIDATED DAMAGES

Contractor and H-GAC agree that Contractor shall cooperate with the END USER at the time an END USER purchase order is placed, to determine terms for any liquidated damages.

ARTICLE 8: INSURANCE

Unless otherwise stipulated in Section B of the Bid/Proposal Specifications, **Contractor** must have the following insurance and coverage minimums:

a. **General liability** insurance with a Single Occurrence limit of at least $1,000,000.00, and a General

Aggregate limit of at least two times the Single Occurrence limit.

Product liability insurance with a Single Occurrence limit of at least $1,000,000.00, and a General Aggregate limit of at least two times the Single Occurrence limit for all Products except Automotive Fire Apparatus. For Automotive Fire Apparatus, see Section B of the Bid/Proposal Specifications.

Property Damage or Destruction insurance is required for coverage of **End User** owned equipment while in **Contractor's** possession, custody or control. The minimum Single Occurrence limit is $500,000.00 and the General Aggregate limit must be at least two times the Single Occurrence limit. This insurance may be carried in several ways, e.g. under an Inland Marine policy, as art of Automobile coverage, or under a Garage Keepers policy. In any event, this coverage must be specifically and clearly listed on insurance certificate(s) submitted to **H-GAC**.

b. Insurance coverage shall be in effect for the length of any contract made pursuant to the Bid/Proposal, and for any extensions thereof, plus the number of days/months required to *deliver* any outstanding order after the close of the contract period.
c. Original Insurance Certificates must be furnished to **H-GAC** on request, showing **Contractor** as the insured and showing coverage and limits for the insurances listed above.
d. If any Product(s) or Service(s) will be provided by parties other than **Contractor**, all such parties are required to carry the minimum insurance coverages specified herein, and if requested by **H-GAC**, a separate insurance certificate must be submitted for each such party.
e. **H-GAC** reserves the right to contact insurance underwriters to confirm policy and certificate issuance and document accuracy.

ARTICLE 9: PERFORMANCE AND PAYMENT BONDS FOR INDIVIDUAL ORDERS

H-GAC's contractual requirements DO NOT include a Performance & Payment Bond (PPB); therefore, Contractor shall offer pricing that reflects this cost savings. **Contractor** shall remain prepared to offer a PPB to cover any order if so requested by the **END USER**. **Contractor** shall quote a price to **END USER** for provision of any requested PPB, and agrees to furnish the PPB within ten business (10) days of receipt of **END USER's** purchase order.

ARTICLE 10: CHANGE OF STATUS

Contractor shall immediately notify **H-GAC**, in writing, of **ANY** change in ownership, control, dealership/franchisee status, Motor Vehicle license status, or name. Contractor shall offer written guidance to advise H-GAC if this Agreement shall be affected in any way by such change. **H-GAC** shall have the right to determine whether or not such change is acceptable, and to determine what action shall be warranted, up to and including cancellation of Agreement.

ARTICLE 11: TEXAS MOTOR VEHICLE BOARD LICENSING

All that deal in motor vehicles shall maintain current licenses that are required by the Texas Motor Vehicle Commission Code. If at any time during this Agreement term, any required **Contractor** license is denied, revoked, or not renewed, **Contractor** shall be in default of this Agreement, unless the Texas Motor Vehicle

Board issues a stay or waiver. Contractor shall promptly provide copies of all current applicable Texas Motor Vehicle Board documentation to **H-GAC** upon request.

Attachment A			
Municipal Emergency Services Inc			
Emergency Medical & Rescue Equipment			
Contract No.: EE08-19			
Product Code	**Mfg.**	**Model & Description**	**Base Offered Price**
EE19BDA	Hurst Products	Hurst Jaws of Life - Price List 2019 -eDRAULIC	15%
EE19BDB	Hurst Products	Hurst Jaws of Life - Price List 2019 - 5000 PSI	15%
EE19BDC	Hurst Products	Hurst Jaws of Life - Price List 2019 - 10,000 PSI	15%
EE19BDD	Hurst Products	Hurst Jaws of Life - Price List 2019 - StrongArm	15%
EE19CDA	Hurst Products	Hurst Jaws of Life - Price List 2019 -eDRAULIC	15%
EE19CDB	Hurst Products	Hurst Jaws of Life - Price List 2019 - 5000 PSI	15%
EE19CDC	Hurst Products	Hurst Jaws of Life - Price List 2019 - 10,000 PSI	15%
EE19CDD	Hurst Products	Hurst Jaws of Life - Price List 2019 - StrongArm	15%
EE19DDA	Hurst Products	Hurst Jaws of Life - Price List 2019 -eDRAULIC	15%
EE19DDB	Hurst Products	Hurst Jaws of Life - Price List 2019 - 5000 PSI	15%
EE19DDC	Hurst Products	Hurst Jaws of Life - Price List 2019 - 10,000 PSI	15%
EE19DDD	Hurst Products	Hurst Jaws of Life - Price List 2019 - StrongArm	15%
EE19EDA	Hurst Products	Hurst Jaws of Life - Price List 2019 -eDRAULIC	15%
EE19EDB	Hurst Products	Hurst Jaws of Life - Price List 2019 - 5000 PSI	15%
EE19EDC	Hurst Products	Hurst Jaws of Life - Price List 2019 - 10,000 PSI	15%
EE19EDD	Hurst Products	Hurst Jaws of Life - Price List 2019 - StrongArm	15%
EE19FDA	Rescue 42	Rescue 42 2019 Price List	8%
EE19GCA	Hurst-Vetter	Vetter Rescue Price List 2019	15%
EE19IAA	Cutters Edge	Cutters Edge Retail Price List 2019	6.25%
EE19LCB	TECGEN	RESCUE80 2019 Price List	16%
EE19LEA	Veridian	Veridian Fire Protective Gear 2019 Price List	30%
EE19LCA	TECGEN	2019 Fire-Dex Consumer Price List	45%
EE19LJA	Fire-Dex	2019 Fire-Dex Consumer Price List (Eff. March 2019)	45%
EE19LKA	Chieftain	2019 Fire-Dex Consumer Price List (Eff. March 2019)	45%

County of Sierra
Office of Administration
1712 N. Date Street
Truth or Consequences, New Mexico 87901
Phone 575-894-6215
Fax 575-894-9548

County Department: Hillsboro Fire Dept.

Purchase Order # :

Line Item Number: 407-75-2900 / 407-75-2999

Vendor Number: 4729

Date: March 9, 2023

REQUISITION

Item Number	Quantity	Description of Item or Service	Price Each	Line Item Number	TOTAL
	4	Air-Pak X3 Pro SCBA w/ CGA	$8,709.67	407-75-2900	34,838.68
	11	45 Min.CARB Air Cylinder 4500psi	$1,532.41	407-75-2999	16,856.51
	3	AV-3000 HT KVLR small	$382.90	407-75-2999	1,148.70
	1	AV-3000 HT KVLR large	$382.90	407-75-2999	382.90
	4	Black Fleece Mask Bag	$25.50	407-75-2999	102.00
					-
		Special Discount HGAC Buy -$4432.16			-
		Contract No. EE08-19			-
					-
					-
					-
					-
					-
					-
					-
					-
					-
		TOTAL with DISCOUNT $48,896.63			-
			Total this Page		$ 53,328.79

RECEIVED
MAR 15 2023
BY:

If new vendor, provide address & phone # below if available.

MES
Name Of Supplier

PH:
FX:

Tom Lander
Department Official

AMENDMENT TO THE OPIOID REMEDIATION COLLABORATIVE JOINT POWERS AGREEMENT

THIS Amendment to the Joint Powers Agreement ("Agreement"), is made by and between the Counties of Catron, Cibola, Guadalupe, Hidalgo, Sierra, Socorro and Valencia, referred to collectively as "the Counties" or "Participating Entities," and additional entities that wish to join the Opioid Remediation Collaborative.

RECITALS:

WHEREAS, the Counties are bodies corporate and politic existing by and under the Constitution and Laws of the State of New Mexico; and,

WHEREAS, the amendment to the Joint Powers Agreement is made under the authority of the Joint Powers Agreement Act, NMSA 1978, Sections 11-1-1 et seq. ("Joint Powers Act"),

WHEREAS, NMSA 1978, Section 4-37-1 (1995) provides that Counties have the power to, "provide for the safety, preserve the health, promote the prosperity and improve the morals, order, comfort and convenience of any county or its inhabitants"; and,

WHEREAS, both the State of New Mexico and the Counties were signatories to a New Mexico Opioid Allocation Agreement, in the amount of $195,547,175.00, which proceeds must be utilized to remediate the opioid epidemic; and,

WHEREAS, under the agreement, the State of New Mexico will receive 45% of the opioid allocation, and the Counties and Municipalities will share in 55% of the opioid litigation proceeds; and,

WHEREAS, the Counties have commenced discussions to explore the feasibility of pooling their resources, and to explore participation with the State and other counties and municipalities to support the development of a treatment system to help those suffering from opioid use disorder within New Mexico; and,

WHEREAS, the Counties collectively lack the in-house expertise to develop of sustainable treatment system; and,

WHEREAS, pursuant to the Joint Powers Agreement approved by the Secretary of Finance and Administration on February 24, 2023, the Counties formed an Opioid Remediation Collaborative to pool their collective recoveries to fund a study with the opioid litigation proceeds, to develop and implement a sustainable opioid remediation

system in New Mexico, and to seek and secure additional funding to support this mission, and;

WHEREAS, additional local governments have expressed interest in joining the Opioid Remediation Collaborative, and pooling their recovery of the opioid litigation proceeds to develop and implement a sustainable opioid remediation system in New Mexico.

NOW, THEREFORE, the parties agree as follows:

1. **Incorporation of Recitals**. The foregoing recitals are incorporated by reference as a material part of this agreement as if the same were set out completely in this agreement.

2. **Amendment**. The Agreement shall be amended as set forth in this instrument, and, except as expressly amended by this instrument, shall remain in full force and effect as written.

3. Section 4.1 of the Agreement is hereby replaced in its entirety with the following (changes indicated in underline and ~~strikethrough~~):

> 4.1 Each participating entity shall appoint one (1) representative to govern the activities of the ORC. ~~The activities of the ORC shall be governed by a six (6) member Board consisting of a representative appointed by each of the participating entities.~~ The Chair of the ORC Board shall have the same voting rights as any other member of the Board. Upon request or invitation, and pursuant to an affirmative vote, additional parties may be added as participating entities to the Opioid Remediation Collaborative. Such participating entities shall be permitted to appoint a representative to the ORC Board. A representative of the New Mexico Department of Health shall serve as ex-officio member of the ORC Board. Ex-officio members shall have no voting powers, and their presence does not bear on the existence of a quorum.

4. Section 12.0 of the Agreement is hereby replaced in its entirety with the following (changes indicated in underline and ~~strikethrough~~):

12.0 CONTACT AND NOTICES

The parties may, from time to time, change their contact person and shall provide prompt notice of such change to the other party. Any notice required under this JPA shall be deemed given and delivered to, and received by, the receiving party three (3) days after deposit in the U.S. mail, certified mail, return receipt requested, postage prepaid, addressed to the receiving party at the mailing address set forth below:

Catron County

Loren Cushman
County Manager
100 Main Street
Reserve, NM 87830

Cibola County

Kate Fletcher
County Manager
700 E. Roosevelt Street
Grants, NM 87020

Guadalupe County

Diana Urban
County Manager
130 S. 4th Street
Santa Rosa, NM 88435

Hidalgo County

Tisha Green
County Manager
305 Pyramid Street
Lordsburg, NM 88045

Socorro County

Michael Hawkes
County Manager
PO Box I
Socorro, NM 87801

Sierra County
Amber Vaughn
County Manager
1712 N. Date
Truth or Consequences, NM 87901

Valencia County

Danny Monette
County Manager
PO Box 1119

Los Lunas, NM 87030

[add additional contacts above with underline and signature pages for your entity below if your entity is interested in joining]

IN WITNESS WHEREOF, the Parties have executed this Agreement as of the date of signature by the Secretary of the Department of Finance and Administration, or his designee, as set forth below.

BOARD OF COUNTY COMMISSIONERS
OF CATRON COUNTY

_____
Buster Green, Commissioner

_____
Audrey McQueen, Commissioner

_____
Haydn Forward, Commissioner

(SEAL)

ATTEST:

_____ _____
Sharon Armijo, County Clerk Date

BOARD OF COUNTY COMMISSIONERS
OF THE COUNTY OF CIBOLA

Daniel J. Torrez, Chair

Martha Garcia, 1st Vice-Chair

Christine Lowery, 2nd Vice Chair

Ralph Lucero, Member

Robert S. Windhorst, Member

ATTEST BY:

Michelle E. Dominguez, Cibola County Clerk

Date

BOARD OF COUNTY COMMISSIONERS
OF GUADALUPE COUNTY

Dr. Randall Brown, Chairman

Ricky Chavez, Commissioner

Ernest E. Chavez, Commissioner

ATTEST BY:

Robert Serrano III, County Clerk

BOARD OF COUNTY COMMISSIONERS
OF HIDALGO COUNTY

_____
Joel Edwards, Chairman

_____
Kelly Peterson, Commissioner

_____
Art Malott, Commissioner

ATTEST

_____ _____
Melissa Delagarza, County Clerk Date

BOARD OF COUNTY COMMISSIONERS
OF THE COUNTY OF SOCORRO

Antonio "Ray" Martinez, Chair
District V

Craig D. Secatero, Vice-Chair
District II

Joe R. Gonzales, Member
District I

John Aguilar, Member
District III

Glen Duggins, Member
District IV

ATTEST BY:

Betty Saavedra, County Clerk

Date

BOARD OF COUNTY COMMISSIONERS
OF THE COUNTY OF SIERRA

_____
Jim Paxon, Chair

_____
Travis Day, Vice- Chair

_____
Hank Hopkins, Commissioner

ATTEST BY:

_____ _____
SHELLY TRUJILLO, COUNTY CLERK DATE

BOARD OF COUNTY COMMISSIONERS
OF THE COUNTY OF VALENCIA

Gerard Saiz Commissioner, District I	Troy Richardson Commissioner, District II
Morris Sparkman Commissioner, District III	Joseph Bizzell Commissioner, District IV

Jhonathan Aragon
Commissioner, District V

Attest:

Michael Milam, County Clerk	Date

APPROVED

DEPARTMENT OF FINANCE AND ADMINISTRATION

By: _____
Patrick M. Allen, Cabinet Secretary

Date: _____

STATE OF NEW MEXICO
DEPARTMENT OF FINANCE and ADMINISTRATION (DFA)
JOINT POWERS AGREEMENT (JPA) BRIEF

DFA Office of the Secretary
Bataan Memorial Bldg., Suite 180
Santa Fe, New Mexico 87501
(505) 827-4985

Agencies must complete and transmit this form along with all backup documentation to the DF A.

PRIMARY PARTY:_____
SECONDARY PARTY:_____
OTHER PARTY:_____
CONTACT NAME:_____ **PHONE:**_____
CONTACT ADDRESS:_____

DOCUMENTS ENCLOSED:		**AMOUNT:**	
☐	JPA	Federal Funds	$_____
☐	JPA Amendment	General Fund	$_____
☐	Purchase Document	Other State Funds	$_____
☐	Written Justification	Local Gov. Funds	$_____
☐	Other_____	TOTAL	$_____

Purpose:_____
Term:_____ From:_____ To:_____
FOR AN AMENDMENT, LIST THE ORIGINAL JPA EXPIRATION DATE:

Statutory Requirements- ***Agencies must check each blank CERTIFYING to DFA that the JPA:***

_____ jointly exercises a power common to the parties (*Transferring funds from one agency to another does not constitute the joint exercise of power.*);
_____ clearly specifies its purpose;
_____ establishes the method by which its purpose will be accomplished;
_____ establishes the manner in which the joint power will exercised;
_____ provides for strict accountability of all receipts and disbursement;
_____ addresses disposition, division, distribution and ownership of any property acquired as the result of the joint exercise of power; and
_____ specifies that any surplus money shall be returned in proportion to the contributions made.

Other Requirements – ***Agencies must enter Y (Yes), N (No), or N/A (Not Applicable) to each of the following:***

_____ Is one original and at least two copies of the JPA or amendment attached? (*DFA will forward copies to the contact.*)
_____ Does the JPA or amendment have original signatures executed by authorized officers, employees or other representatives empowered to bind their respective entities?
_____ Are all exhibits referred to in the JPA attached?
_____ Does the JPA provide for the expenditure or transfer of public funds by a state agency? (*All public money must be budgeted.*)
_____ Does the JPA provide for the transfer of local, state or federal funds to a state agency? If the answer is yes, cite or attach the legislative authority permitting the receiving state agency to increase its budget from such a transfer.
_____ If the JPA or amendment start date is prior to the date submitted to DFA or, if the original JPA has expired, is a justification letter requesting retroactive approval attached? (*A detailed, letter explaining the circumstances must be signed by the agency head of one of the parties.*)
_____ Has the JPA or amendment been reviewed by legal counsel? If yes, state Who_____

Agency Head Signature_____ **Title**_____

OPIOID REMEDIATION COLLABORATIVE

THIS AGREEMENT is entered into by and between the Counties of Catron ("Catron"), Cibola ("Cibola"), Guadalupe ("Guadalupe"), Hidalgo ("Hidalgo"), Sierra ("Sierra"), Socorro ("Socorro"), and Valencia ("Valencia"), referred to collectively as the ("Counties") or ("Participating Entities").

I. RECITALS

WHEREAS, the Counties are bodies corporate and politic existing by and under the Constitution and Laws of the State of New Mexico; and,

WHEREAS, this agreement is made under the authority of the Joint Powers Agreement Act, NMSA 1978, Sections 11-1-1 et seq. ("Joint Powers Act"),

WHEREAS, NMSA 1978, Section 4-37-1 (1995) provides that Counties have the power to, "provide for the safety, preserve the health, promote the prosperity and improve the morals, order, comfort and convenience of any county or its inhabitants"; and,

WHEREAS, both the State of New Mexico and the Counties were signatories to a New Mexico Opioid Allocation Agreement, in the amount of $195,547,175.00, which proceeds must be utilized to remediate the opioid epidemic; and,

WHEREAS, under the agreement, the State of New Mexico will receive 45% of the opioid allocation, and the Counties and Municipalities will share in 55% of the opioid litigation proceeds; and,

WHEREAS, the estimated year one distribution will be $17,439.42 to Catron County, $119,198.58 to Cibola County, $28848.91 to Guadalupe County, $30,333.52 to Hidalgo County, $159,100.56 to Sierra County, $113,641.08 to Socorro County, and $427,768.21 to Valencia County; and,

pooling their resources, and to explore participation with the State and other counties and municipalities to support the development of a treatment system to help those suffering from opioid use disorder within New Mexico; and,

WHEREAS, the Counties collectively lack the in-house expertise to develop of sustainable treatment system; and,

WHEREAS, the Counties here propose to collaborate to fund a study with the opioid litigation proceeds, and to develop and implement a sustainable opioid remediation system in New Mexico.

NOW THEREFORE the parties hereby establish the Opioid Remediation Collaborative, as detailed herein, which Board will exercise the common power outlined below to develop and implement a sustainable, best practice, opioid treatment resource and/or program that will assist New Mexico with closing the addiction treatment gap for those suffering from opioid addiction.

II. COMMON POWER

The parties share the power to "protect generally the property of its municipality and its inhabitants" and to "preserve peace and order" and, "provide for the safety, preserve the health, promote the prosperity and improve the morals, order, comfort and convenience of … its inhabitants". See NMSA 1978, § 3-18-1 (1972) and NMSA 1978, § 4-37-1 (1995)

III. GENERAL PROVISIONS

3.1 Pursuant to the provisions of the Joint Powers Agreements Act, the parties agree that the "Opioid Remediation Collaborative" (ORC) shall be organized and empowered as set forth herein.

and unincorporated areas within the geographic area of the Participating Entities.

3.3 To do all acts necessary and proper to accomplish the purposes of this Agreement, including, but not limited to, the following:

a. Work with the Participating Entities, States, and other stakeholders to develop and implement a sustainable, best practice, opioid treatment resource and/or program that will assist the participating entities in closing the addition treatment gap for those suffering with opioid addiction in those communities.

b. Identify opioid abatement strategies that can support existing services for sustainability purposes.

c. Identify possible opportunities to fill addiction service gaps.

d. Provide technical advisory assistance to the Participating Entities and the local providers as it relates to program implementation and sustainability.

e. Assist the Participating Entities with identifying a strong system of care infrastructure to build on reoccurring abatement strategies that will be implemented annually, based on funding opportunities.

f. Engaging the respective legislative delegations of the participating communities to secure additional support and funding for the regional opioid treatment system.

g. Identify and seek resources and financial commitments to fund the efforts outlined above.

h. Establish, maintain, and administer the opioid remediation fund, which fund shall be held in a separate line item of the Valencia County budget, which fund shall consist of the opioid litigation proceeds from each of the participating entities, federal monies, legislative appropriations, public and private grants, gifts and private donations received for the purpose of received for the

regional opioid remediation.

i. Accept and spend federal monies, public and private grants, gifts, contributions, and devises to assist in carrying out the purposes of this article. These monies do not revert to the parties' respective general funds at the end of a fiscal year, but shall carry-over to the next fiscal year to be used only for such purposes as outlined herein.

IV. BOARD OF DIRECTORS (ORC Board)

4.1 The activities of the ORC shall be governed by a six (6) member Board consisting of a representative appointed by each of the participating entities. The Chair of the ORC Board shall have the same voting rights as any other member of the Board. Upon request or invitation, and pursuant to an affirmative vote, additional parties may be added as participating entities to the Opioid Remediation Collaborative. Such participating entities shall be permitted to appoint a representative to the ORC Board. A representative of the New Mexico Department of Health shall serve as ex-officio member of the ORC Board. Ex-officio members shall have no voting powers, and their presence does not bear on the existence of a quorum.

4.2 The powers and duties of the Board shall be to:

a) Engage such Contractors/Consultants required to perform those duties outlined in Section 3.3 of this Joint Powers Agreement.

b) Elect one (1) of its members as Chairperson and one (1) Vice Chairperson.

c) Hold meetings to receive reports and provide its consultants with guidance and direction in compliance with the "Opens Meeting Act";

d) Determine the time and place of meetings and give public notice thereof;

e) Assure for proper management and control of the finances and property of ORC;

policies as it deems necessary to conduct the affairs of ORC, including but not limited to personnel matters;

g) Submit periodic certified financial statements detailing revenues received from all sources, expenditures, and obligations incurred and unpaid to the parties to this Agreement;

h) Submit a quarterly activity report to the parties;

i) Acquire and approve all appropriate insurance contracts for adequate coverage that will protect the interests of the ORC and the parties to this Agreement, including but not limited to worker's compensation, general liability, unemployment compensation, and property damage. Liability insurance policies shall be reviewed on a regular basis and coverage will be increased when necessary.

j) Approve and execute all ORC contracts, public or private;

k) Acquire and hold all personal or real property of ORC or of the parties; and

5.0 FINANCES AND BUDGETING

5.1 The County of Valencia shall act as the fiscal agent for the ORC and shall collect all revenues accruing to and make all disbursements for the ORC, including providing a monthly expense and revenue report and the Treasurer will provide a Treasurer's report.

5.2 No participating entity is responsible for the provision of any funds in support of this Agreement. The operation of the ORC is contingent upon receipt of opioid litigation proceeds, legislative appropriations, public and private grants, gifts and private donations received for the purpose of developing and implementing a sustainable, best practice, opioid treatment resource and/or program that will assist New Mexico with closing the addiction treatment gap for those suffering from opioid addiction.

5.3 Operating funds of the ORC shall be held in one or more separate accounts and shall not be commingled with the funds of any of the parties to this agreement, and shall only be utilized as provided herein.

of the State which govern the investment of public funds.

5.5 No Party to this agreement shall have any liability to pay for any debt or other obligation incurred by the ORC unless there is a specific written agreement to do so accompanied by an appropriation approved with the requisite formalities.

5.6 The ORC Board shall be strictly accountable and responsible for the proper expenditure of all public funds.

5.7 The ORC shall use, funds provided pursuant to this JPA solely for the uses set forth herein.

5.8 The terms of the Bateman Act, being Sections 6-6-11 (1968), applies to this Agreement. The Act supersedes any conflicting provision of the Agreement.

5.9 Expenditures of the ORC are subject to the provisions of the New Mexico Procurement Code, being NMSA 1978, Sections 13-1-28 et seq. (1984, as amended through 2021), and violation thereof may subject the responsible party to civil and or criminal penalties.

5.10 The fiscal agent shall not allow any department of the fiscal agent to charge against any account unless the ORC submits a signed invoice and or supporting documentation, consistent with the policies and procedures established by the ORC Board, and the County of Valencia Procurement Code.

5.11 The fiscal agent shall be responsible for providing a monthly expense and revenue report to ORC and for providing the report to the ORC Board for review and approval.

5.12 The fiscal agent shall strictly account for receipts and disbursements made pursuant to this JPA, in accordance with the County of Valencia Procurement Code and all other applicable laws and regulations.

6.0 BOOKS AND RECORDS

6.1 The ORC shall maintain adequate and correct accounts of its funds, properties and business transactions, said accounts shall be open to

their agents. The ORC shall cause to be conducted an annual audit, which audit shall be conducted by an independent certified public accountant, approved by the State auditor. The ORC shall submit a copy of said audit to each of the parties.

6.2 Within 90 days after the end of each fiscal year, the ORC shall prepare and present to the parties a comprehensive annual report of the ORC's activities and finances during the preceding year. The ORC shall also render to the parties hereto, at reasonable intervals and within a reasonable time period, such reports and accounting as the parties hereto may from time to time request.

6.3 The ORC shall prepare and present such other reports as may be required by law, regulation or contract to any authorized governmental agency.

7.0 OTHER PROVISIONS

7.1 This JPA and the rights of the parties hereto shall be governed by and construed in accordance with the Laws of the State of New Mexico.

7.2 This JPA incorporates all of the agreements and understandings between the parties hereto concerning the subject matter hereof, and all such agreements and understandings have been merged into this written JPA. No prior agreements or understandings, verbal or otherwise, of the parties or their agents are valid or enforceable unless embodied in this JPA.

8.0 TERMINATION OF AGREEMENT

8.1 The term of this Agreement shall be perpetual, unless terminated as herein provided. Any of the parties may terminate this Agreement at any time, upon the issuance of notice of at least one fiscal-year notice, with the termination will become effective at the beginning of the next fiscal year.

8.2 Upon termination of this Agreement by one or more of the parties to this Agreement, the powers granted to the ORC under this Agreement shall

property. Any property acquired shall be distributed in proportion to the contributions of the parties, though its use will be limited as described herein.

8.3 If any provision of this Agreement is subsequently held to be invalid or unenforceable by a court of competent jurisdiction, then the remainder of this Agreement shall not be affected thereby and the remaining provisions of this Agreement would continue in full force and effect, unless the fulfillment of the purpose of the Agreement is rendered impracticable.

8.4 If any provision of this JPA, or the application of such provisions to any person or circumstances shall be held invalid or unenforceable by a court of competent jurisdiction, the remainder of this JPA, or the application of its provisions to persons or circumstances other than those to which it is held invalid, shall not be affected thereby and the remainder of this JPA can be performed in substantial accordance with the original intent of the parties hereto.

8.5 If any provision of this JPA, or the application of such provisions to any person or circumstances shall be held invalid or unenforceable by a court of competent jurisdiction, the remainder of this JPA, or the application of its provisions to persons or circumstances other than those to which it is held invalid, shall not be affected thereby and the remainder of this JPA can be performed in substantial accordance with the original intent of the parties hereto.

8.6 Pursuant to the provisions of the Joint Powers Act, NMSA 1978, Sections 11-1-1 et seq., all privileges and immunities from liability, exemptions from laws, ordinances, and rules, which apply to the activity of officers, agents, or employees of any signatory public agency when performing their respective functions within the territorial limits of their respective public agencies, shall apply to them to the same extent while engaged in the performance of any of their functions and duties under the provisions of the JPA.

and authorization being made by the Board of County Commissioners for the performance of this Agreement. If sufficient appropriations and authorization are not made by the Board of County Commissioners, this Agreement shall terminate immediately upon written notice being given to all Participating Entities.

9.0 AMENDMENTS

9.1 This agreement may be amended by the parties from time to time, but any amendment shall be in writing, executed by all of the parties thereto, and approved by the Department of Finance and Administration.

10.0 LIABILITY PROVISION

10.1 Neither party shall be responsible for liability incurred as a result of the other party's acts or omissions in connection with this Agreement. Any liability incurred as a result of this Agreement is subject to the immunities and limitations of the New Mexico Tort Claims Act. In accordance with NMSA 1978, Sections 11-1-5 (1961), it is expressly declared that ORC is a separate and independent legal entity from Sierra County, Catron County and Socorro County, which are the entities that comprise the JPA. The members of the ORC Board, its officers, and members of the JPA shall not be held personally liable for any acts performed or omitted in good faith by ORC.

11.0 INSURANCE

11.1 ORC shall obtain insurance to cover any suit which may be brought against it and its officers and employees. All liability insurance policies shall list all the participating counties as additional insureds. The liability shall contain minimum limits amounts of $1,000,000.00 per person and $2,000,000.00 per occurrence.

12.0 <u>CONTACT AND NOTICES</u>

The parties may, from time to time, change their contact person and shall provide prompt notice of such change to the other party. Any notice required under this JPA shall be

deposit in the U.S. mail, certified mail, return receipt requested, postage prepaid, addressed to the receiving party at the mailing address set forth below:

Catron County

Stan Brown
County Manager
100 Main Street
Reserve, NM 87830

Cibola County

Kate Fletcher
County Manager
700 E. Roosevelt Street
Grants, NM 87020

Guadalupe County

Diana Urban
County Manager
130 S. 4th Street
Santa Rosa, NM 88435

Hidalgo County

Tisha Green
County Manager
305 Pyramid Street
Lordsburg, NM 88045

Socorro County

Daniel Hawkes
County Manager
PO Box I
Socorro, NM 87801

Sierra County
Amber Vaughn
County Manager
1712 N. Date

Valencia County

Danny Monette
County Manager
PO Box 1119
Los Lunas, NM 87030

IN WITNESS WHEREOF, the parties have executed this Agreement which becomes effective as of the date of approval by the Department of Finance and Administration.

[SIGNATURES APPEAR ON THE FOLLOWING PAGE]

BOARD OF COUNTY COMMISSIONERS
OF CATRON COUNTY

Anita A. Hand, Chair

John "Cliff" Snyder, Commissioner

Hayden Forward, Commissioner

(SEAL)

ATTEST:

Sharon Armijo, County Clerk

11-10-22
Date

Daniel J. Torrez, Chair

Martha Garcia, 1st Vice-Chair

ABSENT

Christine Lowery, 2nd Vice Chair

Ralph Lucero, Member

Robert S. Windhorst, Member

ATTEST BY:

Michelle E Domínguez, Cibola County Clerk

11/2/2022
Date

CIBOLA COUNTY COUNTY CLERK SEAL STATE OF NEW MEXICO

BOARD OF COUNTY COMMISSIONERS
OF GUADALUPE COUNTY

James E. Moncayo, Chairman

Albert E. Campos, Commissioner

Ernest E. Chavez, Commissioner

ATTEST BY:

Robert Serrano III, County Clerk

BOARD OF COUNTY COMMISSIONERS
OF HIDALGO COUNTY

Joel Edwards, Chairman

Johnny Hatch, Commissioner

Art Malott, Commissioner

ATTEST

Alyssa Esquivel, County Clerk

December 14, 202

Date

BOARD OF COUNTY COMMISSIONERS
OF THE COUNTY OF SOCORRO

ABSENT

Antonio Ray Martinez, Chair
District V

Craig D. Secatero, Vice-Chair
District II

Joe R. Gonzales, Member
District I

Manuel E. Anaya, Member
District III

Glen Duggins
District IV

ATTEST BY:

Betty Saavedra, County Clerk

10-25-22
Date

COUNTY CLERK SOCORRO COUNTY NEW MEXICO

BOARD OF COUNTY COMMISSIONERS
OF THE COUNTY OF SIERRA

Jim Paxon, Chair

Travis Day, Vice- Chair

Hank Hopkins, Commissioner

ATTEST BY:

SHELLY TRUJILLO, COUNTY CLERK

10/25/2022
DATE

BOARD OF COUNTY COMMISSIONERS
OF THE COUNTY OF VALENCIA

Gerard Saiz
Commissioner, District I

Troy Richardson
Commissioner, District II

David A. Hyder
Commissioner, District III

Joseph Bizzell
Commissioner, District IV

Jhonathan Aragon
Commissioner, District V

Attest:

Michael Milam, County Clerk

11-16-2022
Date

APPROVED

DEPARTMENT OF FINANCE AND ADMINISTRATION

By: DocuSigned by: Wayne Propst
6EB4D956A89A432...
Cabinet Secretary Wayne Propst

Date: 2/24/2023

STATE OF NEW MEXICO
DEPARTMENT OF FINANCE and ADMINISTRATION (DFA)
JOINT POWERS AGREEMENT (JPA) BRIEF

DFA Office of the Secretary
Bataan Memorial Bldg., Suite 180
Santa Fe, New Mexico 87501
(505) 827-4985

Agencies must complete and transmit this form along with all backup documentation to the DF A.

PRIMARY PARTY:_____
SECONDARY PARTY:_____
OTHER PARTY:_____
CONTACT NAME:_____ **PHONE:**_____
CONTACT ADDRESS:_____

DOCUMENTS ENCLOSED:		**AMOUNT:**	
☐	JPA	Federal Funds	$_____
☐	JPA Amendment	General Fund	$_____
☐	Purchase Document	Other State Funds	$_____
☐	Written Justification	Local Gov. Funds	$_____
☐	Other_____	TOTAL	$_____

Purpose:_____
Term:_____ From:_____ To:_____
FOR AN AMENDMENT, LIST THE ORIGINAL JPA EXPIRATION DATE:

Statutory Requirements- ***Agencies must check each blank CERTIFYING to DFA that the JPA:***

_____ jointly exercises a power common to the parties (*Transferring funds from one agency to another does not constitute the joint exercise of power.*);
_____ clearly specifies its purpose;
_____ establishes the method by which its purpose will be accomplished;
_____ establishes the manner in which the joint power will exercised;
_____ provides for strict accountability of all receipts and disbursement;
_____ addresses disposition, division, distribution and ownership of any property acquired as the result of the joint exercise of power; and
_____ specifies that any surplus money shall be returned in proportion to the contributions made.

Other Requirements – ***Agencies must enter Y (Yes), N (No), or N/A (Not Applicable) to each of the following:***

_____ Is one original and at least two copies of the JPA or amendment attached? (*DFA will forward copies to the contact.*)
_____ Does the JPA or amendment have original signatures executed by authorized officers, employees or other representatives empowered to bind their respective entities?
_____ Are all exhibits referred to in the JPA attached?
_____ Does the JPA provide for the expenditure or transfer of public funds by a state agency? (*All public money must be budgeted.*)
_____ Does the JPA provide for the transfer of local, state or federal funds to a state agency? If the answer is yes, cite or attach the legislative authority permitting the receiving state agency to increase its budget from such a transfer.
_____ If the JPA or amendment start date is prior to the date submitted to DFA or, if the original JPA has expired, is a justification letter requesting retroactive approval attached? (*A detailed, letter explaining the circumstances must be signed by the agency head of one of the parties.*)
_____ Has the JPA or amendment been reviewed by legal counsel? If yes, state Who_____

Agency Head Signature_____ **Title**_____

FS Agreement No. 23-RO-11030300-023

Cooperator Agreement No. _____

COOPERATIVE FOREST ROAD AGREEMENT
Between The
COUNTY OF SIERRA
And The
USDA, FOREST SERVICE
CIBOLA NATIONAL FOREST AND NATIONAL GRASSLANDS

PARTIES TO AGREEMENT: This agreement, made and entered into this the day of , 20 , by and between the County of Sierra, hereinafter referred to as "County," and the United States Department of Agriculture (USDA), Forest Service, Cibola National Forest and National Grasslands, hereinafter referred to as the "U.S. Forest Service."

PURPOSE OF AGREEMENT: The purpose of this agreement is to set forth the general terms and conditions, acceptable to the parties hereto, for the cooperative planning, survey, design, construction, reconstruction, improvement, and maintenance of certain Forest Roads in Sierra County, State of New Mexico, pursuant to the provisions of 16 U.S.C. 532-538, 23 U.S.C. 205, and the regulations issued by the Secretary of Agriculture.

The Congress has, from time to time, authorized and appropriated funds for "Forest Roads," which are defined as "those Forest roads of primary importance for the protection, administration, and utilization of the National Forests, or where necessary, for the use and development of the resources upon which communities within or adjacent to the National Forests are dependent." Recognizing that substantial benefits will accrue to the Nation and to the State from the construction, reconstruction, improvement, maintenance, and use of certain Forest Roads and roads on the State or local road system over which County has/have jurisdiction, and further that such roads carry substantial volumes of public service traffic as well as National Forest traffic, and further that County has/have road construction, reconstruction, improvement, maintenance, and right-of-way acquisition facilities available to assist in the accomplishment of the work, it is accordingly deemed fitting and desirable to the parties hereto to express by this agreement the general terms of their mutual cooperation in that regard to achieve the maximum benefits therefrom in the public interest.

1. INTENT TO COOPERATE. It is the intention of the parties under this agreement to cooperate as follows:

    a. Agree that certain roads under the jurisdiction of County or the U.S. Forest Service which serve the National Forest and also carry traffic which is properly the responsibility of County should be maintained and, if necessary, improved to a

standard adequate to accommodate safely and economically all traffic which uses such roads.

b. Agree on the identification of roads or road segments which meet the criteria in item a by a listing and appropriate maps.

c. Provide for formal meetings and informal consultation on a regular basis to discuss and agree on action with respect to the roads identified pursuant to item b.

d. Provide for regular and adequate maintenance of the roads identified in item b, including the assignment of maintenance responsibilities.

e. Provide for entering into project agreements when improvements of a road under the jurisdiction of one party is to be financed in whole or in part from funds or resources provided by the other party.

f. Provide for appropriate jurisdictional status of roads through transfer of easements and acquisition of easements by the appropriate party.

2. IDENTIFICATION OF ROADS. A list of roads and segments of roads which meet the criteria set forth in item 1a is agreed upon and is marked "Schedule A" and attached as part of this agreement. Schedule A may be modified from time to time by agreement between County and U.S. Forest Service, by adding or removing roads or road segments, or by altering the description of a road or road segments, to give it proper identity. Each such modification shall be indicated by a revised Schedule A bearing the signatures of the parties or their authorized representatives and the effective date of the revision.

3. MAINTENANCE PLANS. At the annual meeting provided for in item 6, plans for maintaining the roads listed in Schedule A shall be agreed upon. Such plans shall include assignment of responsibility for maintenance or particular elements of maintenance to County or U.S. Forest Service for each road or segment of road listed in Schedule A. To the extent practical, and subject to availability of funds, responsibility for maintenance shall be assigned in proportion to use for which each party is properly responsible.

   Maintenance shall include preserving and keeping the roads, including structures and related facilities as nearly as possible in their original condition as constructed or reconstructed to provide satisfactory and safe road service.

   Maintenance plans shall provide for prompt changes in maintenance assignments during the period of the plan upon agreement by the parties or their designated representatives.

4. PROJECT AGREEMENTS. When improvement of a road listed in Schedule A is to be financed in whole or in part from funds or resources provided by the party not having jurisdiction, the parties shall enter into a project agreement providing for performing the improvement work and its financing. A project agreement is not required for improvement of a road or a road segment over which the party performing and financing

such improvement has jurisdiction. Project agreements shall be supplements to this general agreement and subject to the agreements, provisions, and conditions herein contained.

a. A project agreement shall be entered into prior to beginning of improvement or construction work for which a project agreement is required.

b. The project agreement shall include the following elements:

    1. Identification of road or road segment to be improved or constructed.

    2. Plans and specifications for the project or provision for their development and subsequent agreement thereon.

    3. Schedule of construction or improvement work and designation of the party or parties to perform the work.

    4. Estimates of cost of improvement or construction.

    5. Agreement as to how cost of work is to be borne including arrangements to share in the work or to deposit funds with the performing party for a share of the costs.

c. If funds are provided by County on an advance basis for work to be performed by the U.S. Forest Service, they shall be deposited in the Treasury of the United States to the credit of cooperative work, U.S. Forest Service. Any unused balance of cooperative funds for the purposes outlined in the project agreement shall be returned to County after completion of the work performed or upon agreement of the U.S. Forest Service. If the cooperative funds are made available on a reimbursement basis as the work progresses or upon its completion, the U.S. Forest Service shall submit to County periodic billings, but not more often than monthly, or a final billing as the case may be.

    The amount of cooperative funds as set forth in the project agreement shall be the maximum commitment of County to the project unless changed by a modification of the project agreement.

    If funds are provided by the U.S. Forest Service for work to be performed by County the arrangements shall be set forth in the project agreement. Payments to County shall be made as provided for in the project agreement.

    If it appears that the project cost may exceed the estimate and additional funds may be needed, no obligation shall arise against the Federal government with respect to the increased cost except by modification of the project agreement prior to incurring any commitment.

5. RIGHTS-OF-WAY. Easements or other interests in land acquired by either party shall be adequate to serve the road needs of both parties. The party having jurisdiction of an existing road or intended to have jurisdiction of a road to be constructed shall obtain the needed rights-of-way in its name. There shall be no provisions in any easement document that will prevent the U.S. Forest Service from using or authorizing the use of roads for which Federal funds were expended. County must be in a position to assure the U.S. Forest Service the continuance of such uses for the period needed. The party acquiring the easement or other interest in land shall obtain such title evidence and title approval as required in its acquisitions for roads of comparable standards.

   The costs of such easements or other interests in land are to be at the expense of the acquiring party.

   The U.S. Forest Service shall cooperate in the procurement of rights-of-way over land administered by other agencies of the United States required for any project included under this agreement and shall furnish County copies of survey notes, maps, and other records.

   To the extent possible under available authority, each party agrees to convey easements over lands or interests in lands it owns or administers to the other party in order to provide jurisdiction by the appropriate party as may be agreed to for any road or road segment listed on Schedule A.

6. ANNUAL MEETING AND CONTINUING CONSULTATION. County and U.S. Forest Service shall meet at least once each year to review matters covered by this agreement and to agree on actions to implement this agreement including, but not limited to, (1) approval of changes in the listing of roads on Schedule A; (2) approval of the annual maintenance plan; (3) approval of project agreements for construction or reconstruction; and (4) approval of transfer of jurisdiction of particular roads by easement conveyance. It is also the intent of the parties to arrange for continuing consultation between their representatives with the objective of reaching prompt agreement by the parties on all matters of mutual concern which are covered by this agreement. The Forest Supervisor of the Cibola National Forest for the U.S. Forest Service, and County Mananger for County shall be responsible for making the arrangements for formal meetings and continuing consultation.

7. TEXT MESSAGING WHILE DRIVING. In accordance with Executive Order (EO) 13513, "Federal Leadership on Reducing Text Messaging While Driving," any and all text messaging by Federal employees is banned: a) while driving a Government owned vehicle (GOV) or driving a privately owned vehicle (POV) while on official Government business; or b) using any electronic equipment supplied by the Government when driving any vehicle at any time. All Cooperators, their Employees, Volunteers, and Contractors are encouraged to adopt and enforce policies that ban text messaging when driving company owned, leased or rented vehicles, POVs or GOVs when driving while on official Government business or when performing any work for or on behalf of the Government.

8. MODIFICATION AND TERMINATION.

   a. This agreement may be modified by mutual consent.

   b. This agreement may be terminated by either party upon at least 30 days prior written notice, except that such termination shall in no way affect or change any commitment made authorizing the use of roads or rights-of-way for purposes for which Federal funds were expended, or any operation in progress at time of notice, and provided that such termination shall in no way affect the agreement of the parties hereto with respect to any obligations incurred under the agreement until a full settlement has been made.

9. MISCELLANEOUS.

   a. The United States shall not be liable to the Cooperator for any costs, damages, claims, liabilities, and judgments that arise in connection with the performance of work under this agreement, including damage to any property owned by the Cooperator or any third party.

   b. Nothing herein contained shall be construed to obligate the U.S. Forest Service or County beyond the extent of available funds allocated or programmed for this work, or contrary to applicable laws, rules, and regulations.

   c. No Member of, or Delegate to, the Congress, or Resident Commissioner, shall be admitted to any share or part of this agreement or to any benefits that may arise therefrom, unless it is made with a corporation for its general benefit.

   d. Where applicable, any contract, agreement, or understanding entered into pursuant to this agreement providing for work to be performed shall include the requirements of Federal laws, Executive orders, and Regulations.

10. PRINCIPAL CONTACTS. Individuals listed below are authorized to act in their respective areas for matters related to this agreement.

Principal Cooperator Contacts:

Cooperator Program Contact	Cooperator Administrative Contact
Billy Neeley 2501 S. Broadway Truth or Consequences, NM 87901 575-740-7347 575-894-0525 bneeley@sierraco.org	Amber Vaughn 1712 N. Date, Suite D Truth or Consequences, NM 87901 575-894-6215 avaughn@sierraco.org

Principal U.S. Forest Service Contacts:

U.S. Forest Service Program Manager Contact	U.S. Forest Service Administrative Contact
Name: Patrick Burkett 2113 Osuna Rd. NE Albuquerque, NM 87113 505-346-3883 Patrick.burkett@usda.gov	Angela Cabada Grants Management Specialist 333 Broadway Blvd SE Albuquerque, NM 87102 505-842-3884 angela.cabada@usda.gov

11. ASSURANCE REGARDING FELONY CONVICTION OR TAX DELINQUENT STATUS FOR CORPORATE ENTITIES. This agreement is subject to the provisions contained in the Department of Interior, Environment, and Related Agencies Appropriations Act, 2012, P.L. No. 112-74, Division E, Section 433 and 434 as continually by Consolidated and Further Continuing Appropriations Act, 2013, P.L. No. 113-6, Division F, Title I, Section 1101 (a)(3) regarding corporate felony convictions and corporate federal tax delinquencies. Accordingly, by entering into this agreement County acknowledges that it: 1) does not have a tax delinquency, meaning that it is not subject to any unpaid Federal tax liability that has been assessed, for which all judicial and administrative remedies have been exhausted or have lapsed, and that is not being paid in a timely manner pursuant to an agreement with the authority responsible for collecting the tax liability, and (2) has not been convicted (or had an officer or agent acting on its behalf convicted) of a felony criminal violation under any Federal law within 24 months preceding the agreement, unless a suspending and debarring official of the United States Department of Agriculture has considered suspension or debarment is not necessary to protect the interests of the Government. If County fails to comply with these provisions, the U.S. Forest Service will annul this agreement and may recover any funds County has expended in violation of Sections 433 and 434.

12. SYSTEM FOR AWARD MANAGEMENT REGISTRATION REQUIREMENT (SAM). County shall maintain current information in the System for Award Management (SAM) until receipt of final payment. This requires review and update to the information at least annually after the initial registration, and more frequently if required by changes in information or agreement term(s). For purposes of this agreement, System for Award Management (SAM) means the Federal repository into which an entity must provide information required for the conduct of business as a Cooperator. Additional information about registration procedures may be found at the SAM Internet site at www.sam.gov.

13. COMMENCEMENT/EXPIRATION DATE. This agreement is executed as of the date of last signature and is effective through October 31st, 2027 at which time it will expire. The expiration date is the final date for completion of all work activities under this agreement.

14. AUTHORIZED REPRESENTATIVES. By signature below, the parties certify that the individuals listed in this document as representatives of each party are authorized to act in their respective areas for matters related to this agreement.

This agreement shall be effective as of the date herein written and shall supersede all prior existing agreements, if any, for the same roads.

Amber Vaughn, County Manager — Date
County of Sierra

Steven Hattenbach, Forest Supervisor — Date
U.S. Forest Service, Cibola National Forest and
National Grasslands

The authority and format of this agreement have been reviewed and approved for signature.

ANGELA CABADA Digitally signed by ANGELA CABADA
Date: 2022.12.14 13:20:18 -08'00'

ANGELA CABADA — Date
U.S. Forest Service Grants Management Specialist

Burden Statement

According to the Paperwork Reduction Act of 1995, an agency may not conduct or sponsor, and a person is not required to respond to a collection of information unless it displays a valid OMB control number. The valid OMB control number for this information collection is 0596-0217. The time required to complete this information collection is estimated to average 4 hours per response, including the time for reviewing instructions, searching existing data sources, gathering and maintaining the data needed, and completing and reviewing the collection of information.

The U.S. Department of Agriculture (USDA) prohibits discrimination in all its programs and activities on the basis of race, color, national origin, age, disability, and where applicable, sex, marital status, familial status, parental status, religion, sexual orientation, genetic information, political beliefs, reprisal, or because all or part of an individual's income is derived from any public assistance. (Not all prohibited bases apply to all programs.) Persons with disabilities who require alternative means for communication of program information (Braille, large print, audiotape, etc.) should contact USDA's TARGET Center at 202-720-2600 (voice and TDD).

To file a complaint of discrimination, write USDA, Director, Office of Civil Rights, 1400 Independence Avenue, SW, Washington, DC 20250-9410 or call toll free (866) 632-9992 (voice). TDD users can contact USDA through local relay or the Federal relay at (800) 877-8339 (TDD) or (866) 377-8642 (relay voice). USDA is an equal opportunity provider and employer.

SCHEDULE A

Cibola National Forest & National Grasslands USFS Agreement Number: 23-RO-11030300-023

Sierra County, State of New Mexico

Steven Hattenbach Forest Supervisor Date

Amber Vaughn County of Sierra (County Manager) Date

USFS Agreement Number: 23-RO-11030300-023					COUNTY ROW: County has jurisdiction for law enforcement and authority to control and regulate use.			USFS ROW: USFS has jurisdiction to control and regulate use. Both County and USFS have law enforcement jurisdiction.		ROAD RESTRICTIONS: Restrictions to traffic, including class of vehicle, weight, width, seasonal use restrictions, etc.	ROAD MAINTENANCE & SIGNING: Insert Operating Maint. Level for all NFSR	
ROAD NAME	ROAD NUMBER NFSR	ROAD NUMBER COUNTY	TERMINI	LENGTH	OWN	EASEMENT	CLAIMED (Jud. Dec. required)	OWN (USFS Land)	EASEMENT		ALL COUNTY	ALL USFS
Red Rock	139	34	NM-1 to NM-142	15.20				X				3
Springtime	225		NFSR 139 to 225A	12.40				X				3
Burma	377		NFSR 139 to NFSR 76	17.10				X				2
	377X		NFSR 377 to NFSR 377	1.11				X				2
Penasco Spring	936		NFSR 139 to NFSR 936Q	13.74				X				2
	936A		NFSR 936B to Forest Bdy	0.61				X				2
	936B		NFSR 936 to Termination	1.79				X				2
	941		NFSR 941A to NFSR 941C	6.45				X				2
	941A		NFSR 139 to NFSR941	0.81				X				2
	941B		NFSR 941 to Termination	1.34				X				2
	943		Forest Bdy to End	0.64				X				3
Aragon Well	944		NFSR 139 to NFSR 945A	2.64				X				3
	944A		NFSR 139 to NFSR 944B	2.17				X				2
	944B		NFSR 944A to NFSR 944	0.30				X				2
	945		NFSR 944 to NFSR 945A	0.65				X				2
	945A		NFSR 945 to NFSR 944	1.71				X				2

Schedule A

					COUNTY ROW			USFS ROW		ROAD RESTRICTIONS	ROAD MAINTENANCE & SIGNING	
USFS Agreement Number:	23-RO-11030300-023				County has jurisdiction for law enforcement and authority to control and regulate use.			USFS has jurisdiction to control and regulate use. Both County and USFS have law enforcement jurisdiction.		Restrictions to traffic, including class of vehicle, weight, width, seasonal use restrictions, etc.	Insert Operating Maint. Level for all NFSR	
ROAD NAME	ROAD NUMBER NFSR	ROAD NUMBER COUNTY	TERMINI	LENGTH	OWN	EASEMENT	CLAIMED (Jud. Dec. required)	OWN (USFS Land)	EASEMENT		ALL COUNTY	ALL USFS
	946		NFSR 945 to Termination	0.51				X				2
	947		NFSR 946 to Termination	0.32				X				2
	953		NFSR 944 to Termination	0.30				X				2

State of New Mexico
Department Of Homeland Security
& Emergency Management
P.O. Box 27111
Santa Fe, NM 87502

The acceptance of a subgrant from the United States and the State of New Mexico creates a legal duty and obligation on the part of the subrecipient to use the funds or property made available in accordance with the conditions of the grant as administered by and through the New Mexico Department of Homeland Security and Emergency Management. By signing this obligating award document, the subrecipient certifies it has read, understood, and accepted these documents as binding.

SUBRECIPIENT SUBGRANT AGREEMENT
Signatures of Acceptance

SUB-GRANT AGREEMENT NO:	EMW-2022-SS-00044	TOTAL AWARDED AMOUNT:	$122,850.00
PERFORMANCE PERIOD START DATE:	January 1, 2023	PERFORMANCE PERIOD END DATE:	June 30, 2024

EMERGENCY MANAGEMENT PROGRAM MANAGER PRINTED NAME:			
OFFICIAL SIGNATURE:		**DATE:**	
CONTACT NUMBER:		E-MAIL ADDRESS:	
JURISDICTION CHIEF FINANCIAL OFFICER PRINTED NAME:			
OFFICIAL SIGNATURE:		**Date:**	
CONTACT NUMBER:		**E-MAIL ADDRESS:**	
JURISDICTION SIGNATORY OFFICIAL PRINTED NAME:			
OFFICIAL SIGNATURE:		**DATE:**	
CONTACT NUMBER:		**E-MAIL ADDRESS:**	

NMDHSEM SIGNATURES
GRANTS UNIT MANAGER PRINTED NAME: Valli Wasp
GRANTS UNIT MANAGER OFFICIAL SIGNATURE / DATE:
BUREAU CHIEF PRINTED NAME: Carla Walton
BUREAU CHIEF MANAGER OFFICIAL SIGNATURE / DATE:
CABINET SECRETARY PRINTED NAME: David Dye
CABINET SECRETARY OFFICIAL SIGNATURE / DATE:

Print one original agreement, sign, and email to: DHSEM.Grants@dhsem.nm.gov

State of New Mexico
DEPARTMENT OF HOMELAND SECURITY & EMERGENCY MANAGEMENT
P.O. Box 27111
Santa Fe, NM 87502

SUBRECIPIENT GRANT AGREEMENT
2022 Operation Stonegarden (OPSG)
2022 Federal Grant No.: EMW-2022-SS-00044 Assistance Listing No.: 97.067

1. SUB-GRANT NO.	2. SUBRECIPIENT NAME	3. FIDUCIARY NAME
EMW-2022-SS-00044	Sierra County	Sierra County

4. SUPPLIER ID	5. EIN NUMBER	6. UEI NUMBER	7. CAGE CODE
0000054401	85-6000251	EP48T7AQ75L1	9DE61

8. SUBRECIPIENT PHYSICAL ADDRESS	9. SUBRECIPIENT REMIT ADDRESS
2501 South Broadway Truth or Consequences, NM 87901	100 North Date Street, Ste. 13 Truth or Consequences, NM 87901

10. NMDHSEM CONTACT NAME:	11. CONTACT DESK PHONE:	505-476-0627
Merrill Miller	11 a. CONTACT EMAIL ADDRESS:	DHSEM.Grants@DHSEM.nm.gov cc: merrill.miller@dhsem.nm.gov

12a. PERFORMANCE PERIOD START DATE	January 1, 2023	12b. PERFORMANCE PERIOD END DATE	June 30, 2024
13. TOTAL AWARDED AMOUNT		$122,850.00	

	14a. AUTHORIZED & APPROVED OPSG ACTIVITIES	14b. AMOUNT AWARDED
1	Authorized and Approved Operation Stonegarden Activities	$ 126,000.00
2	LESS (-) NMDHSEM Management & Administrative Costs	$ 3,150.00
3		$
4		$
5		$
6		$
7		$
8		$
9		$
10		$
	TOTAL AWARDED AMOUNT	$ 122,850.00

WHEREAS, the New Mexico Department of Homeland Security and Emergency Management (NMDHSEM) has been designated by the United States Department of Homeland Security (USDHS) to serve as grantee and is thereby authorized to issue this agreement to the applicant, subrecipient, and sub-grantee.

WHEREAS, funding has been obligated from the USDHS pursuant to a request by the applicant, subrecipient, and sub-grantee.

NOW, THEREFORE it is mutually understood and agreed between the grantee, NMDHSEM, and sub-grantee, **Sierra County** hereinafter referred to as "subrecipient" as follows:

ARTICLE 1: SUBGRANT AGREEMENT DOCUMENTS

The following additional sub-grant agreement documents are fully incorporated into this agreement and thereby constitute additional terms and conditions of this agreement:

This Agreement:

- The USDHS Notice of Funding Opportunity (NOFO) Fiscal Year 2022 Homeland Security Grant Program: https://www.fema.gov/grants/preparedness/homeland-security/fy-22-nofo.
- Fiscal Year 2022 Preparedness Grants Manual, FEMA Grant Programs Directorate, Version 3, May 2022: https://www.Fema.Gov/Grants/Preparedness/Manual.
- Attachment 1 USDHS Standard Terms and Conditions (January 24, 2022) in effect on the date of the Declaration which are incorporated by reference into this Subgrant Agreement.
- Attachment 2 Reimbursement Checklist.
- Attachment 3 Glossary and Definitions.
- Attachment 4 Acronyms.

ARTICLE: 2 SCOPE OF WORK

As authorized by Section 2002 of the Homeland Security Act of 2002, as amended, (Pub. L. No. 107-296 as amended) (6 U.S.C Section 603), and the Department of Homeland Security Appropriations Act, 2016 (Pub. L. No. 117-103), the subrecipient shall use OPSG funds to support state and local efforts to prevent terrorism and other catastrophic events and to prepare the Nation for the threats and hazards that pose the greatest risk to the security of the United States. Specifically, OPSG funds support enhanced cooperation and coordination among Customs and Border Protection (CBP), United States Border Patrol (USBP), and federal, state, local, tribal, and territorial law enforcement agencies to improve overall border security. The OPSG grant provides funding to support joint efforts to secure the United States' borders along routes of ingress/egress to and from international borders, to include travel corridors in states bordering Mexico and Canada, as well as states and territories with international water borders. The funds authorized under this subgrant agreement shall be utilized by the subrecipient to address the actions identified in their Concept of Operations (CONOP)/Application and as approved by USBP, FEMA and NMDHSEM.

All work performed pursuant to this agreement must comply with the approved CONOP. All work must be completed within the performance period, between **January 1, 2023,** and **June 30, 2024.** The subrecipient shall not sub-grant any part of this award to any other entity or organization.

ARTICLE 3: PROJECT IMPLEMENTATION

Approved projects must commence within the first reporting quarter. If a project cannot commence and be operational within the first reporting quarter of the approved award date, the subrecipient must submit a written statement to the NMDHSEM Contact as identified on page 1, field 10, of this document signed by the subrecipient

signatory officials, justifying the delay in implementation, the expected starting date, and a formal request to extend the project start date past the first reporting quarter. At the discretion of NMDHSEM, the grant award is subject to cancellation.

ARTICLE 4: REPORTING REQUIREMENTS

The subrecipient, shall submit timely Quarterly Financial Progress Reports to the NMDHSEM Sub-grant Analyst and Quarterly Performance Progress Reports to the NMDHSEM Homeland Security Bureau (HSB) Grants Manager. Use of outdated forms will not be accepted. All quarterly reports are due: October 15, January 15, April 15, and July 15 within the Period of Performance (POP) beginning after the conclusion of the first quarter of grant activity. **Requests for payment will be processed only if both quarterly reports are received timely.**

- **Final reports:** Due 15 days after the end of the POP. The Final Narrative Report will suffice as the final performance progress report.

The subrecipient must immediately report in writing to the NMDHSEM Contact alleged acts or allegations of fraud or misappropriation of funds for work authorized under this Sub-Grant Agreement. This requirement extends further to an obligation by the subrecipient to report any legal action, lawsuit, bankruptcy, or other action that may jeopardize the successful completion of any authorized project.

ARTICLE 5: REIMBURSEMENTS

Submission of a request for reimbursement must be accompanied **by both** the Quarterly Financial Progress Report and Quarterly Performance Progress Report forms. Reimbursement shall be based upon authorized and allowable expenditures consistent with the project narrative, grant guidelines, and the submission of timely financial and performance progress reports. Payments may be withheld by NMDHSEM pending correction of deficiencies. Reimbursement of expenditures shall be requested at least quarterly for expenditures within the performance period. Expenditures must be supported with source documentation (e.g., copies of proof of payment, invoices, receipts, timesheets with name/wage/hours, cost allocation, warrants, etc.). The NMDHSEM staff will not process reimbursements if quarterly performance progress and financial-reports are not submitted.

All reimbursements are contingent upon funds being allocated, budgeted, and encumbered for that purpose.

DELAYS AND DENIAL OF PAYMENT. Reduce delays in processing of payment requests by checking for accuracy prior to submission.

Reasons for NMDHSEM declining payment requests include, but are not limited to, the following:

- The Period of Performance has expired;
- The amount exceeds the remaining funding available for disbursement prior to the final financial and program compliance reviews (the hold or funding retention amount);
- Request for Payment requires a state and/or budget amendment, and cannot be processed until the amendment request is received/approved;
- The reimbursement requested is for an activity outside of the approved scope of work;
- Forms are not signed by an authorized person, or are signed by only one signatory;
- Reimbursement of awarded funds have been suspended due to a non-compliance issue such as failure to submit quarterly reports; or
- Reimbursements of awarded funds have been suspended due to noncompliance activities.

CONTRACTS: All contracts must be submitted to the NMDHSEM Contact for NMDHSEM review prior to Implementation.

EQUIPMENT: Allowable equipment categories are listed on the web-based FEMA Authorized Equipment List (AEL): www.fema.gov/grants/tools/authorized-equipment-list. Screenshots of the AEL number and description are required to be submitted along with the Request for Approval (RFA). Some equipment items require prior approval from FEMA before obligation or purchase of the items. Please reference the grant notes in the AEL for each equipment item to ensure prior approval is not required or to ensure prior approval is obtained if necessary. Subrecipients may purchase equipment not listed on the AEL, but **only** if they first seek and obtain **prior approval** from FEMA through NMDHSEM. Unless otherwise stated, all equipment must meet all mandatory regulatory and/or FEMA-adopted standards to be eligible for purchase using these funds. In addition, subrecipients will be responsible for obtaining and maintaining all necessary certifications and licenses for the requested equipment.
TRAVEL: All reimbursable travel must be pre-approved by NMDHSEM 30 days prior to travel date.
PER DIEM: Reimbursements for state, local, tribal, and territorial jurisdictions cannot exceed the rates of the New Mexico Per Diem and Mileage Act, NMSA 1978, Section 10-8-4 (2021).
TRAINING: Requires NMDHSEM pre–approval 30 days prior to registering or participating in training opportunities.
EXERCISE: Due to the nature of OPSG, exercise expenses are **NOT** allowable costs under OPSG.
FOOD AND BEVERAGES: Per National Preparedness Directorate (NPD) allowances, food and/or beverage expenses provided by recipients are allowable costs if:

- The food and/or beverages are provided to participants at training sessions, meetings, or conferences that are allowable activities under the NPD program guidelines; and
- Expenses incurred for food and/or beverages, and provided at training sessions, meetings, or conferences, satisfy the following tests:
    - The cost of the food and/or beverages provided is considered to be reasonable.
    - The food and/or beverages provided are subject of a work-related event and work continues after meals are served.
    - Participation by all participants is mandatory; and
    - The food and/or beverages provided are not related directly to amusement and/or social event. (Any event where alcohol is being served is considered a social event; therefore, costs associated with the event are not allowed).

NON-REIMBURSABLE EXPENSES:

- Transfer of funds between any programs.
- Contracts, single vendor response to a competitive bid, sole source contracts, and procurements greater than $60,000 not pre-approved by NMDHSEM.
- Training and related travel costs not pre-approved by NMDHSEM.
- Construction and renovation.
- Indirect costs.
- Supplanting (using federal funds to purchase items previously budgeted for with state, local, tribal, and territorial funds).
- Maintenance and/or wear and tear costs of general use vehicles and emergency response apparatus.
- Equipment purchased for an exercise cannot be used for permanent installation and/or beyond the scope of an exercise.
- Weapons and ammunition. Weapons of any kind (including firearms, grenade launchers, bayonets); ammunition; and weaponized aircraft, vessels, and vehicles of any kind remain unallowable expenses under any FEMA preparedness grant program.
- Entertainment and sporting events.
- Personal items such as laundry, personal hygiene items, magazines, in-room movies, personal travel, personal phone calls.
- Travel insurance, visa, and passport charges.
- Lodging costs in excess of state per diem, as appropriate.
- Food reimbursement when travel does not exceed 24 hours.
- Alcoholic beverages.

- Late fees, or interest charges.
- Lobbying, political contributions, legislative liaison activities.
- Organized fund–raising, including salaries of persons while engaged in these activities.
- Land acquisition.
- Expenditures not supported with appropriate documentation when submitted for reimbursement. Only properly documented expenditures will be processed for payment. Unsupported expenditures will be returned to the jurisdiction for resubmission.
- Expenses not pre-approved by NMDHSEM via a RFA form.

ARTICLE 6: PERFORMANCE MEASURES

The Quarterly Performance Progress Report form shall demonstrate performance and progress relative to the applicable critical tasks and the performance metrics identified in the USDHS NOFO Fiscal Year 2022 Homeland Security Grant Program:

FY 2022 Critical Tasks:

- Progress in achieving project timelines and milestones.
- Percent measurable progress toward completion of project.
- How funds have been expended during reporting period, and explaining expenditures related to the project.

FY 2022 Performance Metrics:

- Number of contacts that occurred as a result of OPSG deployments
  - Number of arrests that resulted from OPSG contacts
  - Value of drug seizures that resulted from OPSG contacts

ARTICLE 7: SUBRECIPIENT MONITORING POLICY

The NMDSHEM as the pass-through entity is responsible for monitoring their subrecipients in a manner consistent with the terms of the federal award at 2 C.F.R. Part 200, including 2 C.F.R. § 200.332. This includes the responsibility to monitor the activities of the subrecipient as necessary to ensure that the subaward is used for authorized purposes, in compliance with federal statutes, regulations, and the terms and conditions of the subaward; and that subaward performance goals are achieved.

In terms of overall award management, subrecipient responsibilities include, but are not limited to: accounting of receipts and expenditures, cash management, maintaining adequate financial records, reporting and refunding expenditures disallowed by audits, or other assessments and reviews, and ensuring overall compliance with the terms and conditions of the award or subaward, as applicable, including the terms of 2 C.F.R. Part 200.

The NMDSHEM will conduct periodic monitoring is required to ensure that program goals, objectives, timelines, budgets, and other related program criteria are being met. The NMDHSEM will periodically monitor, review, and conduct analysis of financial, programmatic, and administrative policies, procedures, and practices. This monitoring may include review of accounting for receipts and expenditures, cash management, maintaining adequate financial records, means of allocating and tracking costs, contracting, procurement, records management, payroll, means of allocating staff costs, property and equipment management system, progress of project activities, etc. Monitoring may include desk and field audits. Technical assistance is available from NMDHSEM staff.

ARTICLE 8: FUNDING RESTRICTIONS, ALLOWABLE AND UNALLOWABLE COSTS AND RECOVERY OF FUNDS

All costs charged to awards covered by the USDHS NOFO Fiscal Year 2022 Homeland Security Grant Program must comply with the Uniform Administrative Requirements, Cost Principles, and Audit Requirements at 2 C.F.R. Part 200, unless otherwise indicated in the funding notice, or the terms and conditions of the award. This includes, among other requirements, that costs must be incurred, and products and services must be delivered, within the period of performance of the award. See 2 C.F.R. § 200.403(h) (referring to budget periods, which for FEMA awards under this award is the same as the period of performance).

In general, the Cost Principles establish standards for the allowability of costs, provide detailed guidance on the cost accounting treatment of costs as direct or administrative costs, and set forth allowability principles for selected items of cost. More specifically, except as otherwise stated in the USDHS NOFO Fiscal Year 2022 Homeland Security Grant Program, the terms and condition of an award, or other program materials, costs charged to awards covered by the USDHS NOFO Fiscal Year 2022 Homeland Security Grant Program must be consistent with the Cost Principles for Federal Awards located at 2 C.F.R. Part 200, Subpart E. In order to be allowable, all costs charged to a FEMA award or applied to the cost share must be reasonable in nature and amount and allocable to the particular FEMA award. Additionally, all costs charged to awards must comply with the grant program's applicable statutes, policies, and requirements in this notice as well as with the terms and conditions of the award. If FEMA and/or NMDHSEM staff identify costs that are inconsistent with any of these requirements, these costs may be disallowed, and FEMA and/or NMDHSEM staff may recover funds as appropriate, consistent with applicable laws, regulations, and policies.

As part of those requirements, subrecipients may only use federal funds for the purposes set forth in the USDHS NOFO Fiscal Year 2022 Homeland Security Grant Program and the terms and conditions of the award, and those costs must be consistent with the statutory authority for the award.

Grant funds may not be used for matching funds for other federal grants/cooperative agreements, lobbying, or intervention in federal regulatory or adjudicatory proceedings. In addition, federal funds may not be used to sue the federal government or any other government entity.

Management and Administration (M&A). The subrecipient may use a maximum of up to 5% of the funding passed through by NMDSHEM solely for M&A purposes associated with this award. The M&A activities are those directly relating to the management and administration of OPSG funds, such as financial management and monitoring. The M&A expenses must be based on actual expenses or known contractual costs. Any M&A requests that are simple percentages of the award, without supporting justification, will not be allowed, or considered for reimbursement.

Law Enforcement Readiness. The OPSG grant funds may be used to increase operational, material, and technological readiness of state, local, territorial, and tribal law enforcement agencies. The Delegation of Immigration Authority, Section 287(g) of the Immigration and Nationality Act (INA) program allows a state or local law enforcement entity to enter into a partnership with Immigration and Customs Enforcement (ICE), under a joint Memorandum of Agreement (MOA), to receive delegated authority for immigration enforcement within their jurisdictions.

The OPSG grant funds may be requested and may be approved on a case-by-case basis for immigration enforcement training in support of the border security mission. Requests for training will be evaluated on a case-by-case basis and can only be used for certification in the section 287(g) program provided by USDHS/ICE. The OPSG subrecipient with agreements under section 287(g) of the INA (8 U.S.C. § 1357(g)) to receive delegated authority for immigration enforcement within their jurisdictions may also be reimbursed for section 287(g) related operational activities with approval from FEMA through NMDSHEM on a case-by-case basis. The subrecipient must be authorized by USBP Headquarters and Sectors, and operational activities must be coordinated through a USBP Sector.

Regional Border Projects. Subrecipients are encouraged to prioritize the acquisition and development of regional projects on the borders to maximize interoperability and coordination capabilities among federal agencies and with state, local, and tribal law enforcement partners. Such regional projects include:

- Communications equipment;
- Radio systems and repeaters;
- Integration with regional intelligence and information sharing effort (i.e., fusion centers):
  - Intelligence analysts.
- Situational Awareness equipment:
  - License Plate Reader Networks;
  - Visual detection and surveillance systems;
  - Sensor Systems;
  - Radar Systems (for air and/or marine incursions); and
  - Aircraft systems (manned or unmanned).

Unallowable Costs. The OPSG unallowable costs include costs associated with evidence collection, arrest processing, prosecution, and Traffic/Drinking Under the Influence (DUI) checkpoints, such as evidence documentation cameras, fingerprinting supplies, alcohol breathalyzers, portable work lights, traffic barricades, and similar law enforcement expenses.

The OPSG unallowable costs also include costs associated with staffing and general IT computing equipment and hardware, such as personal computers, faxes, copy machines, modems, etc. The OPSG is not intended as a hiring program. Therefore, applying funds toward hiring full-time or permanent sworn public safety officers is unallowable.

Supplantation. The OPSG funding shall not be used to supplant inherent routine patrols and law enforcement operations or activities not directly related to providing enhanced coordination between local and federal law enforcement agencies.

Maintenance and Sustainment: Preparedness grant funds may be used to purchase maintenance contracts or agreements, warranty coverage, licenses, and user fees. These contracts may exceed the POP if they are purchased incidental to the original purchase of the system or equipment as long as the original purchase of the system or equipment is consistent with that which is typically provided for, or available through, these types of agreements, warranties, or contracts.

When purchasing a stand-alone warranty or extending an existing maintenance contract on an already-owned piece of equipment system, coverage purchased may not exceed the POP of the award used to purchase the maintenance agreement or warranty, and it may only cover equipment purchased with NSGP funds or for equipment dedicated for NSGP-related purposes. As with warranties and maintenance agreements, this extends to licenses and user fees as well.

The use of FEMA preparedness grant funds for maintenance contracts, warranties, repair or replacement costs, upgrades, and user fees are allowable under all active and future grant awards, unless otherwise noted. Except for maintenance plans or extended warranties purchased incidental to the original purchase of the equipment, the period covered by maintenance or warranty plan must not exceed the POP of the specific grant funds used to purchase the plan or warranty.

The policy set forth in FEMA's Information Bulletin (IB) 379, Guidance to State Administrative Agencies to Expedite the Expenditure of Certain USDHS/FEMA Grant Funding, initially for FY 2007-2011, allows for the expansion of eligible maintenance and sustainment costs which must be in (1) direct support of existing capabilities; (2) must be an otherwise allowable expenditure under the applicable grant program; (3) be tied to one of the core capabilities in the five mission areas contained within the Goal, and (4) shareable through the EMAC. Additionally, eligible costs

may also be in support of equipment, training, and critical resources that have previously been purchased with either federal grant or any other source of funding other than FEMA preparedness grant program dollars.

Construction and Renovation. The OPSG funds may not be used for any construction. Subrecipients should refer to IB 421b or contact their FEMA HQ Preparedness Officer for guidance and clarification.

Exercises. Due to the nature of OPSG, exercise expenses are not allowable costs under OPSG.

Weapons. Grant funds may not be used for the purchase of equipment not approved by FEMA. Grant funds must comply with FEMA Policy 207-22-0002 Prohibited or Controlled Equipment Under FEMA Awards, and may not be used for the purchase of the following equipment: weapons and weapon accessories, including ammunition, firearms; grenade launchers; and bayonets; and weaponized aircraft, vessels, or vehicles of any kind with weapons installed;

ARTICLE 9: PROCUREMENT

Procurement shall comply with all federal, state, and local procurement requirements including 2 C.F.R. 200.320 and the New Mexico Procurement Code for expenditure of funds under this Agreement. The subrecipient must conform to applicable state and federal law and the Procurement Standards Sections 2 C.F.R. § 200.317-326, and Appendix II.

Contractors that develop or draft specifications, requirements, Statements of Work, and/or Requests for Proposals (RFP) for a proposed procurement shall be excluded from bidding or submitting a proposal to compete for the award of such procurement. Local bidder's preference is not allowed for federally funded procurements. Procurement transactions shall be conducted to provide maximum open and free competition.

When procuring property and services under this agreement, the subrecipient will follow 2 C.F.R. 200.318 through 2 C.F.R. 200.326 and Appendix II. The subrecipient must use its own documented procurement procedures which reflect applicable state, local, tribal, and territorial laws, and regulations, provided that the procurements conform to applicable federal law and the standards identified in 2 C.F.R. 200. As such, the subrecipient must use one of the methods of procurement identified in 2 C.F.R. 200.320. A RFA form must be approved by NMDHSEM staff-prior to any-tangible expenditures.

Procurement Documentation: Per 2 C.F.R. § 200.318(i), subrecipients are required to maintain and retain records sufficient to detail the history of procurement covering at least the rationale for the procurement method, selection of contract type, contractor selection or rejection, and the basis for the contract price. States and territories are encouraged to maintain and retain this information as well and are reminded that in order for any cost to be allowable, it must be adequately documented per 2 C.F.R. § 200.403(g). Examples of the types of documents that would cover this information include but are not limited to:

1. Solicitation documentation, such as requests for quotes, invitations for bids, or requests for proposals;
2. Responses to solicitations, such as quotes, bids, or proposals;
3. Pre-solicitation independent cost estimates and post-solicitation cost/price analyses on file for review by federal personnel, if applicable;
4. Contract documents and amendments, including required contract provisions; and
5. Other documents required by federal regulations applicable at the time a subgrant is awarded to a subrecipient.

Additional information on required procurement records can be found in the Procurement Disaster Assistance Team (PDAT) Field Manual, https://www.fema.gov/sites/default/files/documents/fema_PDAT-field-manual_102021.pdf.

Procurement from Minority Owned and Women Owned Business is encouraged and must be tracked and reported

to NMDHSEM on the quarterly reports. Procurement transactions shall be conducted to provide maximum open and free competition. Each sole–source procurement single vendor response to a competitive bid, and all purchases require prior approval of NMDHSEM.

ARTICLE 10: COMPETITION AND CONFLICTS OF INTEREST

Among the requirements of 2 C.F.R. § 200.319(b) applicable to all non-federal entities other than states, in order to ensure objective contractor performance and eliminate unfair competitive advantage, contractors that develop or draft specifications, requirements, statements of work, or invitations for bids or requests for proposals must be excluded from competing for such procurements. The FEMA considers these actions to be an organizational conflict of interest and interprets this restriction as applying to contractors that help a subrecipient develop its grant application, project plans or project budget. This prohibition also applies to the use of former employees to manage the grant or carry out a contract when those former employees worked on such activities while they were employees of the non-federal entity.

Under this prohibition, unless the subrecipient solicits for and awards a contract covering both development and execution of specifications (or similar elements as described above), and this contract was procured in compliance with 2 C.F.R. §§ 200.317 – 200.327, federal funds cannot be used to pay a contractor to carry out the work if that contractor also worked on the development of those specifications. This rule applies to all contracts funded with federal grant funds, including pre-award costs, such as grant writer fees, as well as post-award costs, such as grant management fees. Additionally, some of the situations considered to be restrictive of competition include, but are not limited to:

1. Placing unreasonable requirements on firms for them to qualify to do business;
2. Requiring unnecessary experience and excessive bonding;
3. Noncompetitive pricing practices between firms or between affiliated companies;
4. Noncompetitive contracts to consultants that are on retainer contracts;
5. Organizational conflicts of interest;
6. Specifying only a "brand name" product instead of allowing "an equal" product to be offered and describing the performance or other relevant requirements of the procurement; and
7. Any arbitrary action in the procurement process.

Per 2 C.F.R. § 200.319(c), the subrecipient must conduct procurements in a manner that prohibits the use of statutorily or administratively imposed state, local, tribal, or territorial geographical preferences in the evaluation of bids or proposals, except in those cases where applicable federal statutes expressly mandate or encourage geographic preference. Nothing in this section preempts state licensing laws.

Under 2 C.F.R. § 200.318(c)(1), the subrecipient is required to maintain written standards of conduct covering conflicts of interest and governing the actions of their employees engaged in the selection, award, and administration of contracts. **No employee, officer, or agent may participate in the selection, award, or administration of a contract supported by a federal award if he or she has a real or apparent conflict of interest.** Such conflicts of interest would arise when the employee, officer or agent, any member of his or her immediate family, his or her partner, or an organization that employs or is about to employ any of the parties indicated herein, has a financial or other interest in or a tangible personal benefit from a firm considered for a contract. The officers, employees, and agents of the non-federal entity may neither solicit nor accept gratuities, favors, or anything of monetary value from contractors or parties to subcontracts. However, subrecipients entities may set standards for situations in which the financial interest is not substantial, or the gift is an unsolicited item of nominal value. The standards of conduct must provide for disciplinary actions to be applied for violations of such standards by officers, employees, or agents of the non-federal entity.

Under 2 C.F.R. 200.318(c)(2), if the subrecipient has a parent, affiliate, or subsidiary organization that is not a state, local, tribal, or territorial government, the subrecipient must also maintain written standards of conduct covering

organizational conflicts of interest. In this context, organizational conflict of interest means that because of a relationship with a parent company, affiliate, or subsidiary organization, the subrecipient is unable or appears to be unable to be impartial in conducting a procurement action involving a related organization. The non-federal entity must disclose in writing any potential conflicts of interest to FEMA or NMDHSEM in accordance with applicable FEMA policy.

ARTICLE 11: REQUIREMENTS FOR SMALL UNMANNED AIRCRAFT SYSTEM (sUAS)

All requests to purchase Small Unmanned Aircraft Systems (sUAS) with FEMA grant funding must comply with FEMA Policy 207-22-0002 Prohibited or Controlled Equipment Under FEMA Awards, and IB 438 Guidance for Use of Operation Stonegarden Funds for Small Unmanned Aircraft Systems and Certain Costs Related to Transportation and Medical Care: https://www.fema.gov/grants/preparedness/about/informational-bulletins, and also include a description of the policies and procedures in place to safeguard individuals' privacy, civil rights, and civil liberties of the jurisdiction that will purchase, take title to or otherwise use the sUAS equipment. The sUAS policies are not required at the time of application but must be received and approved by FEMA prior to obligating SHSGP funds. All grant-funded procurements must be executed in a manner compliant with federal procurement standards at 2 C.F.R. §§ 200.317 – 200.327. For recipients that use SHSGP funds for sUAS, FEMA advises that there is a general privacy concern related to the use of this equipment if the data the devices collect is transmitted to servers not under the control of the operator. It has been reported that some manufacturers of sUAS encrypt data and send that data to servers outside the United States. The USDHS Privacy Office suggests the subrecipient fully explore data transmission and storage issues with vendors to reduce the possibility of data breaches.

Additionally, the Joint Explanatory Statement (JES) accompanying the FY 2022 USDHS Appropriations Act further requires recipients to certify they have reviewed the Industry Alert on Chinese Manufactured Unmanned Aircraft Systems and completed a risk assessment that considers the proposed use of foreign-made sUAS to ascertain potential risks (e.g., privacy, data breaches, cybersecurity, etc.) related to foreign-made versus domestic sUAS.

Acquisition and Use of Technology to Mitigate UAS (Counter-UAS). In August 2020, FEMA was alerted of an advisory guidance document issued by USDHS, the Department of Justice, the Federal Aviation Administration, and the Federal Communications Commission: https://www.dhs.gov/publication/interagency-legal-advisory-uas-detection-and-mitigation-technologies. The purpose of the advisory guidance document is to help non-federal public and private entities better understand the federal laws and regulations that may apply to the use of capabilities to detect and mitigate threats posed by UAS operations (i.e., Counter-UAS or C-UAS).

The Departments and Agencies issuing the advisory guidance document, and FEMA, do not have the authority to approve non-federal public or private use of UAS detection or mitigation capabilities, nor do they conduct legal reviews of commercially available product compliance with those laws. The advisory does not address state and local laws nor potential civil liability, which UAS detection and mitigation capabilities may also implicate.

It is strongly recommended that, prior to the testing, acquisition, installation, or use of UAS detection and/or mitigation systems, entities seek the advice of counsel experienced with both federal and state criminal, surveillance, and communications laws. Entities should conduct their own legal and technical analysis of each UAS detection and/or mitigation system and should not rely solely on vendors' representations of the systems' legality or functionality. Please also see the USDHS press release on this topic for further information: https://www.dhs.gov/news/2020/08/17/interagency-issues-advisory-use-technology-detect-and-mitigate-unmanned-aircraft.

ARTICLE 12: GENERAL SERVICES ADMINISTRATION SCHEDULES

States, tribes, and local governments, and any instrumentality thereof (such as local education agencies or institutions of higher education) may procure goods and services from a General Services Administration (GSA) schedule. GSA offers multiple efficient and effective procurement programs for state, tribal, and local governments, and instrumentalities thereof, to purchase products and services directly from pre-vetted contractors. The GSA Schedules (also referred to as the Multiple Award Schedules and the Federal Supply Schedules) are long-term government-wide contracts with commercial firms that provide access to millions of commercial products and services at volume discount pricing. Information about GSA programs for states, tribes, and local governments, and instrumentalities thereof, can be found GSA's Programs for State and Local Governments and State and Local Governments webpages.

For tribes, local governments, and their instrumentalities that purchase off of a GSA schedule, this will satisfy the federal requirements for full and open competition provided that the subrecipient follows the GSA ordering procedures; however, tribes, local governments, and their instrumentalities will still need to follow the other rules under 2 C.F.R. §§ 200.317 – 200.327, such as solicitation of minority businesses, women's business enterprises, small businesses, or labor surplus area firms (§ 200.321), domestic preferences (§ 200.322), contract cost and price (§ 200.324), and required contract provisions (§ 200.327 and Appendix II).

Other Supply Schedules and Programs: For non-federal entities other than states (such as tribes, local governments, and nonprofits) that want to procure goods or services from a state supply schedule, cooperative purchasing program, or other similar program, in order for such procurements to be permissible under federal requirements, the following must be true:

1. The procurement of the original contract or purchasing schedule and its use by the non-federal entity complies with state and local law, regulations, and written procurement procedures;
2. The state or other entity that originally procured the original contract or purchasing schedule entered into the contract or schedule with the express purpose of making it available to the non-federal entity and other similar types of entities;
3. The contract or purchasing schedule specifically allows for such use, and the work to be performed for the non-federal entity falls within the scope of work under the contract as to type, amount, and geography;
4. The procurement of the original contract or purchasing schedule complied with all the procurement standards applicable to a non-federal entity other than states under at 2 C.F.R. §§ 200.317 – 200.327; and
5. With respect to the use of a purchasing schedule, the non-federal entity must follow ordering procedures that adhere to applicable state, tribal, and local laws and regulations and the minimum requirements of full and open competition under 2 C.F.R. Part 200.

If a non-federal entity other than a state seeks to use a state supply schedule, cooperative purchasing program, or other similar type of arrangement, FEMA recommends the subrecipient discuss the procurement plans with its NMDHSEM Contact.

ARTICLE 13: CONTRACTS

Contracts for professional and consultant services executed during this grant period must include federal, state, local, tribal, and territorial government required contract language, a project budget, and require pre-approval by NMDHSEM prior to implementation. Contract deliverables must meet the intent of the grant application and grant requirements. Justification is required for compensation for individual consultant services, which must be reasonable and consistent with the amount paid for similar services in the marketplace. Detailed invoices and time and effort reports are required for consultants. *See* 2 C.F.R. 200.1, 2 C.F.R. 200 Appendix II to Part 200.

ARTICLE 14: AUDIT REQUIREMENTS

As the federal grant recipient, the State of New Mexico requires a subrecipient expending $750,000.00 or more in federal funds in the organization's fiscal year to conduct an organization–wide audit in accordance with 2 C.F.R. 500 Subpart F. The subrecipient will permit NMDHSEM staff and auditors to have access to the subrecipient's and third-party contractors' records and financial statements as necessary for the State of New Mexico to comply with 2 C.F.R. 500 Subpart F. Copies of audit findings must be submitted to the NMDHSEM Contact within 30 days after the subrecipient receives its audit report, or within a 9–month period of the grant closeout date, whichever is earlier. Include the federal agency name, program, grant number, and year; the Assistance Listing title and number; and the name of the pass-through agency.

ARTICLE 15: PROPERTY AND EQUIPMENT MANAGEMENT

The subrecipient will follow the property standards articulated in 2 C.F.R. 200.310 through 2 C.F.R. 200.326. The subrecipient shall maintain an effective property management system; safeguards to prevent loss, damage or theft; maintenance procedures to keep equipment in good condition; and disposition procedures. A Property Inventory Report shall be submitted to NMDHSEM annually each January 30 with the Financial Progress Report during the performance period, and continued submission is required annually until final disposition of the equipment. The subrecipient shall, when practical, prominently display the following on any equipment purchased with award funds: Purchased with funds provided by the U.S. Department of Homeland Security. No equipment purchased with these grant funds may be assigned to other entities or organizations without the expressed approval in writing from NMDHSEM, prior to the jurisdiction's encumbrance or expenditure for that equipment.

Any disposition of NSGP property or equipment must be in accordance with 2 C.F.R. 200.313(e) and pre-approved by FEMA through NMDHSEM.

ARTICLE 16: NATIONAL ENVIRONMENTAL POLICY ACT (NEPA)/ENVIRONMENTAL PLANNING AND HISTORIC PRESERVATION (EHP) COMPLIANCE

The subrecipient must provide information to FEMA for the legally required environmental planning and historic preservation (EHP) review and to ensure compliance with the applicable EHP laws and Executive Orders (EO). These EHP requirements include but are not limited to National Environmental Policy Act, National Historic Preservation Act, Endangered Species Act, E 11988 Floodplain Management, EO 11990 Protection of Wetlands, and EO 12898 Environmental Justice. The subrecipient must comply with all federal, state, local, tribal, and territorial EHP requirements and obtain applicable permits and clearances.

Subrecipients shall not undertake any activity from the project that would result in ground disturbance, facility modification, or relates to the use of sonar equipment without the prior approval of FEMA. These include but are not limited to communications towers, physical security enhancements involving ground disturbance, new construction, and modifications to buildings that are 50 years old or older, and exercises. The subrecipient must comply with all mitigation or treatment measures required for the project as the result of FEMA's EHP review. An EHP Screening Form does not need to be provided for those exercises that are planned to take place at previously approved facilities, such as, fire and police academies, search and rescue training facilities, and explosive testing centers. Any type of exercise that requires any type of land, water, or vegetation disturbance or building of temporary structures must undergo an EHP review.

Any change to an approved project description will require re-evaluation for compliance with EHP requirements before the project can proceed. If ground disturbing activities occur during project implementation, the subrecipient must ensure monitoring of ground disturbance and if any potential archeological resources are discovered, the subrecipient will immediately cease construction in that area and notify NMDHSEM, FEMA and the New Mexico

Historic Preservation Division. Initiation of these activities prior to completion of FEMA's EHP review will result in a non-compliance finding and may result in ineligibility of grant funding.

ARTICLE 17: PUBLICATIONS

Publications created with funding under this grant shall prominently contain the following statement: "This Document was prepared under a sub-grant from the U.S. Department of Homeland Security, and the New Mexico Department of Homeland Security and Emergency Management. Points of view or opinions expressed in this document are those of the authors and do not necessarily represent the official position or policies of the U.S. Department of Homeland Security or the State of New Mexico."

ARTICLE 18: RECORDKEEPING

The subrecipient will follow the record retention and access standards articulated in 2 C.F.R. 200.333 through 2 C.F.R. 200.337. The grant financial and administrative records shall be maintained for a period of three years following the date of the closure of the grant award, or audit if required. Time and effort, personnel and payroll records for all individuals reimbursed under the award must be maintained. Property and equipment records shall be maintained for a period of three years following the final disposition, replacement or transfer of the property and equipment.

ARTICLE 19: CHANGES TO AWARD

All change requests must be submitted either in writing or electronically to the NMDHSEM Contact for review **90 days prior** to the termination of this agreement. All change requests must be accompanied by a justification narrative and a budget and spending plan. All change requests must be consistent with the scope of the project and grant guidelines. Change requests will be considered only if reporting requirements are current, and all other terms and conditions of this agreement have otherwise been met at the time of the request. If approved by NMDHSEM, changes in the programmatic activities, purpose of the project, key personnel specified on the grant award, contractual services for activities central to the purposes of the award, change in project site, or release of special conditions, may result in an amendment to this award. Requests for changes must be submitted using the Request for Budget-Project Revision form. **No more than two budget/project revisions will be considered per subgrant agreement.**

ARTICLE 20: EXTENSION REQUESTS

Extensions to the period of performance (POP) for this program may be allowed at the discretion of NMDHSEM. Extensions to the POP identified in the award will only be considered through formal, written requests and must contain specific and compelling justifications as to why an extension is required. Requests for extensions must be submitted using the Request for Sub-Grant Extension form.

Extensions due to exigent or emergency circumstances will be determined by NMDHSEM on a case-by-case basis. Applicants who experience technical issues must notify the NMDHSEM Contact **within 90 days of the POP end date**. All extension requests must address the following:

1. The grant program, fiscal year, and award number;
2. Reason for the delay –including details of the legal, policy, or operational challenges that prevent the final outlay of awarded funds by the deadline;
3. Current status of the activity(ies);
4. Approved POP termination date and new project completion date;
5. Amount of funds drawn down to date;
6. Remaining available funds, both federal and, if applicable, non-federal;

7. Budget outlining how remaining federal and, if applicable, non-federal funds will be expended;
8. Plan for completion, including milestones and timeframes for achieving each milestone and the position or person responsible for implementing the plan for completion; and Certification that the activity(ies) will be completed within the extended POP without any modification to the original statement of work, as described in the IJ and as approved by FEMA.

Extension requests will be granted only due to compelling legal, policy or operational challenges. Extensions are typically granted for no more than a six-month period. Extension requests and budgetary changes cannot extend past 12 months of the original subgrant agreement end date and are at the discretion of NMDHSEM leadership. Extension requests will only be considered for the following reasons:

1. Contractual commitments by the recipient or subrecipient with vendors prevent completion of the project, including delivery of equipment or services, within the existing POP;
2. The project must undergo a complex environmental review that cannot be completed within the existing POP;
3. Projects are long-term by design, and therefore acceleration would compromise core programmatic goals; or
4. Where other special or extenuating circumstances exist.

All requests for Sub-grant award extensions must be received at NMDHSEM **prior to the 90-day sub-grant award termination date**. Requests for sub-grant award extensions will only be considered for documented extenuating circumstances and will be reviewed by the NMDHSEM Contact on a case-by-case basis.

ARTICLE 21: OTHER GENERAL PROVISIONS

- The performance period for this grant award is **January 1, 2023** through **June 30, 2024**. Further, all personnel related grant activity must be completed between **January 1, 2023** and **June 30, 2024**. Funds may not be obligated outside of these time periods. An obligation occurs when funds are encumbered, as with a purchase order and/or commitment of salaries and benefits. All obligated and encumbered funds must be liquidated within 15 days of the end of the performance period when the final performance progress and financial progress reports are due.

- The FY 2022 SAFECOM Guidance on Emergency Communications Grants, in coordination with stakeholders and federal partners, and the National Emergency Communications Plan Goals, targets funding priorities to address:
    - Priority 1: Governance and Leadership
    - Priority 2: Planning and Procedures
    - Priority 3: Training, Exercises, and Evaluation
    - Priority 4: Activities that Enhance Communications Coordination
    - Priority 5: Standards-Based Technology and Infrastructure
    - Priority 6: Cybersecurity

- The subrecipient shall comply with the requirements and restrictions of the USDHS NOFO Fiscal Year 2022 Homeland Security Grant Program. By signing this obligating award document, the subrecipient certifies it has read, understood, and accepted these documents as binding.

- The signatures of the signatory officials on this award certifies that all financial expenditures, including all supporting documentation submitted for reimbursement, have been incurred by the jurisdiction, and are eligible and allowable expenditures consistent with the grant guidelines for this project. The subrecipient shall follow the financial management requirements imposed on them by NMDHSEM, which includes the requirements of the USDHS.

- The signature of the signatory officials on this award attests to the subrecipient's understanding, acceptance, and compliance with Lobbying; Debarment, Suspension, and Other Responsibility Matters; Drug-free Workplace Requirements; Conflict of Interest, and Non-Supplanting certifications. Federal funds will not be used to supplant state, local, tribal, and territorial funds. Federal funds must be used to supplement existing funds to augment program activities, and not replace those funds which have been appropriated in the budget for the same purpose. Potential supplanting may be the subject of application and pre-award, post-award monitoring, and audit.

- The subrecipient shall ensure the accounting system used allows for separation of fund sources. These grant funds cannot be commingled with funds from other state, local, tribal, and territorial agencies, and each award is accounted for separately.

- The subrecipient shall ensure the accounting system used allows for separation of fund sources. These grant funds cannot be commingled with funds from other state, local, tribal, and territorial agencies, and each award is accounted for separately.

- The subrecipient shall comply with Federal Civil Rights Laws and Regulations: Title VI of the Civil Rights Act of 1964, Section 504 of the Rehabilitation Act of 1973, Title IX of the Education Amendments of 1972, Age Discrimination Act of 1975, and Americans with Disabilities Act of 1991. The subrecipient will take reasonable steps to ensure Limited English Proficient (LEP) persons have meaningful access to its programs and activities. Executive Order 13347 Individuals with Disabilities in Emergency Preparedness requires government to support safety and security for individuals with disabilities in situations involving disasters, including earthquakes, tornadoes, fires, floods, hurricanes, and acts of terrorism.

- The subrecipient certifies that it has an Affirmative Action Plan/Equal Employment Opportunity Plan (EEOP) (for USDHS/DOJ grants). An EEOP is not required for recipients of less than $25,000.00 or fewer than 50 employees.

- The subrecipient certifies that its employees are eligible to work in the U.S. as verified by Form I–9, Immigration & Naturalization Service Employment Eligibility.

ARTICLE 22: REMEDIES FOR NON-COMPLIANCE

For the reasons listed below, special conditions may be imposed, reimbursements may be partially or wholly withheld, the award may be wholly or partly suspended or terminated, or future awards, reimbursements and award modifications may be withheld. The NMDHSEM may institute the following, but is not limited to, withholding authority to proceed to the next phase of a project, requiring additional or more detailed financial reports, additional project monitoring, and/or establish additional prior approvals. The NMDHSEM shall notify the subrecipient of its decision in writing stating the nature and the reason for imposing the conditions/restrictions, the corrective action required and timeline to remove them, and the method of requesting reconsideration of the imposed conditions/restrictions. The subrecipient must respond within five days of receipt of notification.

- Unwillingness or inability to attain project goals.
- Unwillingness or inability to adhere to Special Conditions listed in this subgrant agreement.
- Failure or inability to adhere to grant guidelines and federal compliance requirements.
- Improper procedures regarding contracts and procurements.
- Inability to submit reliable and/or timely reports.
- Management systems which do not meet federal required management standards.
- Failure or inability to adhere to the terms and conditions of this agreement.

ARTICLE 23: TERMINATION

For Cause: In compliance with 2 C.F.R. Part 200.340(a)(1), if performance is not occurring as agreed, the award may be reduced or terminated without compensation for reduction or termination costs. The NMDHSEM will provide notice of five days to the subrecipient stating the reasons for the action, steps taken to correct the problems, and the commencement date of the reduction or termination. The NMDHSEM will reimburse the subrecipient only for acceptable work or deliverables, necessary and allowable costs incurred through the date of reduction or termination. Final payment may be withheld at the discretion of NMDHSEM until completion of a final NMDHSEM review. Disposition of any equipment acquired under a terminated grant must be in accordance with 2 C.F.R. 200.313(e).

For Convenience: In compliance with 2 CFR Part 200.340(a)(4), this Agreement may be terminated without cause by the subrecipient upon written notice setting forth the reasons for such termination, and the effective date at least 30 days prior to the intended date of termination. A termination pursuant to this provision does not nullify a party's obligations for performance, or liabilities for failure to perform already incurred prior to the date of termination. Any project may be terminated upon convenience, in whole or in part, for the convenience of the subrecipient; though a partial termination notification must specify that portion of the project which is to be terminated. Allowable costs obligated and/or incurred through the date of termination shall be reimbursed. Disposition of any equipment acquired under a terminated grant must be in accordance with 2 C.F.R. 200.313(e).

ARTICLE 24: SPECIAL CONDITIONS

- The SHSGP Notice of Funding Opportunity Requirements – All of the instructions, guidance, limitations, and other conditions set forth in the USDHS Preparedness Grants Manual and the NOFO for this program are incorporated here by reference in the terms and conditions of your award. All recipients must comply with any such requirements set forth in the USDHS Preparedness Grants Manual and the NOFO.

- The grant award amount is a funding allocation and is not to be interpreted as expenditure authorizations or approvals. Pre-approval from HSB and the Administrative Service Bureau (ASB) is required for all purchases regardless of any application review.

- All subrecipients must complete a National Incident Management System (NIMS) Assessment on or before September 30 of each year. All funded beneficiaries, to include but not limited to, first response agencies and special teams must also complete a NIMS Assessment. Continuing working on NIMS implementation objectives throughout the performance period of the grant and thereafter.

- All subrecipients must complete and/or revise their local and/or regional Tactical Interoperable Communication Plan (TICP) every year. Please submit to the New Mexico Statewide Interoperability Coordinator (SWIC) and the HSB Grant Manager.

- All OPSG performance activities will be monitored by the HSB Grant Manager on a quarterly basis or as needed to ensure subrecipients are conducting progressive activities to ensure project completion within the specified performance period.

- All revisions must be reviewed and approved by the HSB Grant Manager and ASB Staff to ensure that the proposed project meets all federal and state eligibility requirements. All Revisions must meet the original scope of the project.

- Personnel hiring, overtime, and backfill expenses are permitted under this grant to perform allowable SHSGP planning, organization, training, exercise, and equipment activities. Under OPSG, overtime costs are allowable only in so far as they meet the intent of the program. All subrecipients of HSGP funds, including OPSG allocations, may not use more than 50% of their awards to pay for personnel activities unless a waiver is approved by FEMA through NMDHSEM. For more information on the 50% personnel cap, please see FEMA IB 421b, Clarification on the Personnel Reimbursement for Intelligence Cooperation and Enhancement of Homeland Security Act of 2008 (Public Law 110-412) https://www.fema.gov/sites/default/files/2020-04/Price_Wavier_Act_Clarification_IB_421A_Final_06-04-19.pdf.

- Quarterly financial and progress reports are due on October 15, January 15, April 15, and July 15, within the Period of Performance. Final reports are due 15 days after the end of Period of Performance.

- A RFA form must be approved-prior to any tangible expenditures.

- All revision requests must be reviewed and approved by NMDHSEM staff. All requests must meet the original scope of the project which, may result in a subgrant amendment.

- A revision of a project's scope of work must be pre-approved by the HSB Grant Manager and ASB Staff before the jurisdiction can proceed with the RFA process. Additional documentation may be requested from the subrecipient prior to a recommendation to NMDHSEM Leadership for final approval.

- The beneficiary of this award is solely responsible for all expenditures that are incurred outside of the award performance period. All expenditures that are incurred above and beyond the amount of this sub-grant agreement are the sole responsibility of the subrecipient of this award.

- Upon completion of all awarded projects, any remaining funds will be de-obligated and reverted back to NMDHSEM.

- Grant funds may not be used for the following:
  - Unallowable Equipment: Grant funds must comply with FEMA Policy 207-22-0002 Prohibited or Controlled Equipment Under FEMA Awards, and may not be used for the purchase of firearms, ammunition, grenade launchers, bayonets, or weaponized aircraft, vessels, or vehicles of any kind with weapons installed.
  - Expenditures for weapons systems and ammunition.
  - Costs associated with hiring, equipping, training, etc. sworn public safety officers whose primary job responsibilities include fulfilling traditional public safety duties such as law enforcement, firefighting, emergency medical services, or other first responder duties.
  - Costs that supplant traditional public safety positions and responsibilities
  - Activities and projects unrelated to the completion and implementation of the OPSG Program.

State of New Mexico

Shelly Trujillo
County Clerk
575-894-2840

Candace Chavez
County Treasurer
575-894-3524

Michael Huston
County Assessor
575-894-2589

Thomas Pestak
Probate Judge
575-740-4900

SIERRA COUNTY
NEW MEXICO

Amber Vaughn
County Manager
575-894-6215
1712 N Date St. Suite D
Truth or Consequences, New Mexico 87901

County of Sierra

Travis Day,
Commission Chair
575-894-6215

James E. Paxon,
Commission Vice-Chair
575-894-6215

Hank Hopkins
Commissioner
575-894-6215

Joshua Baker
Sheriff
575-894-9150

RESOLUTION NO. 110-152
Sierra County Road Milage Certification

WHEREAS, Sierra County Board of Commissioners are required each year, by Section 66-6-23 NMSA 1978, to certify the total maintained mileage for the county is 566.5, and:

WHEREAS, this list must identify each of the public roads maintained by name, county route numbers, beginning route description and milage of each route, and:

WHEREAS, all certifications and maps must be submitted, no later than April 1st of each year, now

NOW, THEREFORE, BE IT RESOLVED THAT, Sierra County Commission meeting in regular session March 21,2023, submits the attached road mileage list which includes a map of the locations.

PASSED, APPROVED AND ADOPTED THIS 21st day of March 2023.

Board of County Commissioner

_____
Travis Day, Chairman

_____
James E. Paxon, Vice-Chairman

_____
Hank Hopkins, Commissioner

ATTEST:

_____
Shelly Trujillo, County Clerk

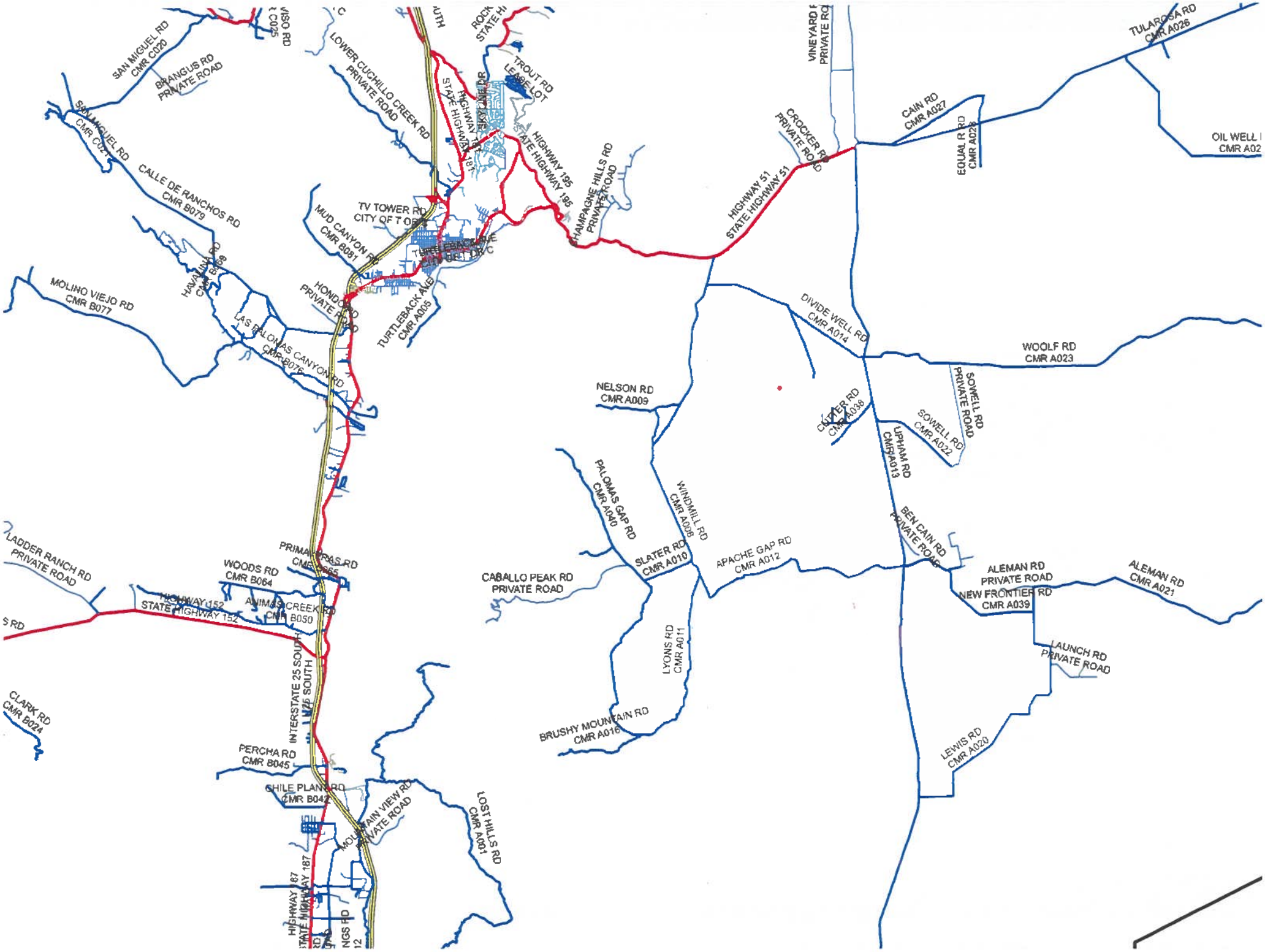
SAN MIGUEL RD CMR C020
BRANGUS RD PRIVATE ROAD
SAN MIGUEL RD CMR C021
CALLE DE RANCHOS RD CMR B079
MOLINO VIEJO RD CMR B077
HAVANA RD CMR B068
LAS PALOMAS CANYON RD CMR B076
LOWER CUCHILLO CREEK RD PRIVATE ROAD
MUD CANYON RD CMR B081
TV TOWER RD CITY OF T OR
HONDO RD PRIVATE ROAD
TURTLEBACK AVE CMR A005
STATE HIGHWAY 181
HIGHWAY 181
ROCK STATE HI
TROUT RD
LEGEL LOT
HIGHWAY 195
STATE HIGHWAY 195
CHAMPAGNE HILLS RD PRIVATE ROAD
HIGHWAY 51
STATE HIGHWAY 51
CROCKER RD PRIVATE ROAD
VINEYARD PRIVATE RO
CAIN RD CMR A027
EQUAL R RD CMR A028
TULAROSA RD CMR A026
OIL WELL CMR A02
DIVIDE WELL RD CMR A014
WOOLF RD CMR A023
SOWELL RD PRIVATE ROAD
SOWELL RD CMR A022
UPHAM RD CMR A013
CUTER RD CMR A038
NELSON RD CMR A009
PALOMAS GAP RD CMR A040
WINDMILL RD CMR A036
SLATER RD CMR A010
APACHE GAP RD CMR A012
BEN CAIN RD PRIVATE ROAD
ALEMAN RD PRIVATE ROAD
NEW FRONTIER RD CMR A039
ALEMAN RD CMR A021
LAUNCH RD PRIVATE ROAD
LEWIS RD CMR A020
CABALLO PEAK RD PRIVATE ROAD
LYONS RD CMR A011
BRUSHY MOUNTAIN RD CMR A016
LADDER RANCH RD PRIVATE ROAD
WOODS RD CMR B064
PRIMA PAS RD CMR B065
ANIMAS CREEK RD CMR B050
HIGHWAY 152
STATE HIGHWAY 152
INTERSTATE 25 SOUTH
CLARK RD CMR B024
PERCHA RD CMR B045
CHILE PLANT RD CMR B042
MOUNTAIN VIEW RD PRIVATE ROAD
LOST HILLS RD CMR A001
HIGHWAY 187
STATE HIGHWAY 187

SIERRA COUNTY ROAD NAMES AND MILEAGE for 2023

ROUTE NUMBER ***DISTRICT A***

	ROAD NAME	MILES
A001	LOST HILLS RD	14.6
A003	CABALLO MOUNTAIN MINE RD	6.7
A004	NELSON SHORTCUT RD	1.2
A005	TURTLEBACK AVE	2.1
A006	ELDRED RD	0.3
A007	LOWER CUCHILLO CREEK RD	2.5
A008	WINDMILL RD	10.6
A009	NELSON RD	2.8
A010	SLATER RD	4.1
A011	LYONS RD	12.0
A012	APACHE GAP RD	7.4
A013	UPHAM RD	28.0
A014	DIVIDE WELL RD	5.5
A015	L7 RD	2.3
A016	BRUSHY MOUNTAIN RD	3.0
A020	LEWIS RD	9.6
A021	ALEMAN RD	11.3
A022	SOWELL RD	2.9
A023	WOOLF RD	17.4
A024	HARDING RD	4.1
A025	OIL WELL RD	7.1
A026	TULAROSA RD	17.6
A027	CAIN RD	4.1
A028	EQUAL R RD	1.4
A029	BUCHORN RD	13.5
A030	GRAHAM RD	1.6
A031	FULLER RD	10.8
A032	HARDING RD	8.9
A033	SOUTH CANYON RD	3.0
A034	SHANNON TANKS RD	2.7
A035	WELL CANYON RD	0.7
A036	WILLOW DRAW RD	1.9
A037	MIDDLE TANK RD	2.0
A038	ANTELOPE RUN RD, BUTTERFLY WAY, CUTTER RD, PASEO DEL CONEJO RD	3.6
A039	SPACEPORT AMERICA BLVD, NEW FRONTIER RD	3.4
A040	PALOMAS GAP RD	3.8
A1	TRADE ROAD OFF FOR PENS RD	0.3
	TOTAL MILES	234.8

ROUTE NUMBER ***DISTRICT B***

	ROAD NAME	MILES
B001	WHITE ROCK RD	0.7
B002	MACHO RD	9.1
B004	BERRENDA RD	9.0
B005	KAYTENNAE TRAIL RD	2.3
B006	CATTLE TRACK RD	0.6
B008	LAKE VALLEY SCHOOL RD	0.6
B010	GOLD DUST RD	1.0
B011	SIKES DRAW RD	4.5
B012	N PERCHA RD	6.9
B013	TIERRA BLANCA RD	7.6
B015	ITALIAN ST, KINGSTON CEDAR ST, KINGSTON IRON ST, KINGSTON MAIN ST, KINGSTON NORTH ST, KINGSTON SUPERIOR ST, KINGSTON WATER ST, LULA ST, VIRTUE ST	2.3
B021	ROBERTS RD	0.5
B022	CUNNINGHAM RD, ELENORA ST, FIFTH ST, FOURTH ST, ROSA ST, S SECOND ST, SIXTH ST, THIRD ST, WHITTENBURG RD	2.2
B024	CLARK RD	3.7
B025	COALSON RD	0.9
B026	LADDER RANCH RD, LADDER RD	1.1
B027	COPPER FLATS RD	2.6
B028	BERMUDA RD, GONZALES RIVER RD	2.8
B029	TIBBS RD	0.5
B030	GARAY RD	0.9
B031	ROBISON RD	1.0
B034	BLACK RD	0.6
B035	GARCIA SPRINGS RD	0.8
B036	BRADLEY RD	1.3
B037	ARREY RD, COSPER RD, SAINT CHRISTOPHER RD, SAN FELIPE RD	1.2
B038	MILKWEED RD, W WAGONEER RD	1.5
B039	SUGAR SAND RD	1.3
B042	CHILE PLANT RD	2.1
B045	PERCHA RD	3.7
B050	ANIMAS CREEK RD	6.4
B052	ALTO RD	0.7
B053	SECO TOWER RD	0.6
B054	YESO RD	0.6
B055	VENO RD	0.5
B056	UVAS RD	1.0
B057	VEGA RD	0.5
B058	KOKANO RD	0.3
B059	DOGIE RD	0.3
B060	CLAVO RD	0.8
		85.0

ROUTE NUMBER	DISTRICT B	MILES
	total from previous page	85.0
B061	UPTON RD	0.1
B062	VACA RD	1.1
B063	CAPAZ RD	0.2
B064	WOODS RD	4.1
B065	EL CUERNO RD, PRIMAVERAS RD	2.5
B066	ZEGIN RD	0.3
B067	PECARRY RD	0.6
B068	HIDDEN VALLEY RD	0.3
B069	HAVALINA RD	1.0
B070	PALOMA BLANCA RD	1.4
B071	MESA VIEW RD	0.7
B072	LAS PALOMAS RD, PIGEON RD	2.4
B073	ARAGON SPRINGS RD	0.7
B074	A SPEAR RD, PAJARO RD	0.7
B075	OLD LANDFILL LOOP	0.6
B076	LAS PALOMAS CANYON RD	10.1
B077	MOLINO VIEJO RD	10.5
B078	APODACA RD	0.6
B079	CALLE DE RANCHOS RD	13.3
B081	MUD CANYON RD	4.1
B083	HILLSBORO CEMETERY RD	0.2
B084	BUGGY RIDE RD	0.4
B085	HARNESS RD	0.1
B086	INDEPENDENCE DR, MULE TRAIN RD	0.4
B087	LIBERTY WAY	0.2
B088	MOUNTAIN BELL RD	0.2
B089	SNAKE SPRINGS RD	0.3
B090	EL AGUILA RD	1.6
B093	SILVER SPRINGS RD	0.7
B094	LYONS DEN RD	0.1
B096	APACHE RD, W GRAND PERCHA RD, GRANITE RD, GREENHORN RD, NAVAJO RD, PIMA RD, SIOUX RD	2.2
B097	E GRAND PERCHA RD, PERCHA DAM CANAL RD	5.3
B098	TORTUGAS RD	0.5
B099	MESQUITE RD	0.2
B102	TRUJILLO CREEK RD	1.6
B103	DERRY CANAL RD	1.5
B109	E RIVER ROSE RD, W RIVER ROSE RD	1.3
B110	BOX H BAR RD	0.1
B112	OLD HOT SPRINGS RD	7.9
		165.1

ROUTE NUMBER	*DISTRICT B*	MILES
	total from previous page	165.1
B113	FRIO RD	0.2
B116	PALOMAS CIRCLE RD	1.2
B117	HILLSBORO TRANSFER STATION RD	0.4
B118	LAKE FRONT DR, SECO RD, WILD SAGE RD	1.0
B119	GOFF RD, GORDON AVE	0.5
B121	ARMSTEAD RD	0.5
B122	LOCO WEED RD	0.2
B123	CHAPAREL AVE	0.1
B124	WALNUT ST	0.1
	TOTAL MILES	169.3

ROUTE NUMBER **DISTRICT C**

	ROAD NAME	MILES
C002	SAINT CLOUD RD	8.0
C003	HERMOSA RD	16.1
C004	ZEOLITE RD	1.5
C005	RANCHO DEL CHIZ RD	3.4
C006	CHLORIDE CREEK RD, REPUBLIC RD, WALL STREET RD	3.8
C007	SANTIAGO RD	1.3
C008	SOUTH FORK RD	2.3
C009	HICKLAND CANYON RD	1.8
C011	BURT RD	0.4
C012	HVL RD	4.6
C013	ROQUE CANYON RD	2.5
C015	PUNCH TUCKER RD	0.6
C016	TORTILLA FLATS RD	6.8
C017	CC CAMP RD, CUCHILLO CREEK RD	4.6
C018	CUCHILLO CREEK RD, FARM CANYON RD	7.2
C020	SAN MIGUEL RD	6.2
C021	ARAGON SPRINGS RD, KELLY CANYON RD, SAN MIGUEL RD	4.1
C024	WILLOW SPRINGS RD	0.8
C025	EL DEVISO RD	1.9
C026	GREASEWOOD RD	1.8
C027	COUGAR RD	4.0
C028	CATTLEMAN RD	2.1
C029	CANADA DE LA CRUZ RD	8.9
C030	BOBCAT RD	1.1
C031	LANGNER RD	3.3
C032	LEMES RD "Snyder's"	4.3
C033	CALLE DE MADERA RD, CALLE DEL NORTE RD	10.9
C034	RED ROCK RD	15.2
C035	GARCIA FALLS RD	2.4
C036	AXTEL RD, BLUN RD, GRAFTON RD, MCCONKY RD, TUCKER RD	0.9
C037	CASPER RD	4.0
C039	DOVE LN	0.9
C040	MONTICELLO CEMETERY RD	0.2
C042	PANKEY RD	1.0
C043	CALLE DEL SUR RD	1.2
C044	PLAZA DE MONTICELLO RD	0.1
C045	CARRIZO PEAK RD	0.3
C046	RACCOON RD	0.7
C047	DESERTAIRE RD	0.4
C048	LANDFILL RD	0.4
C049	ATLANTIC RD, BUTTE RD, EQUATOR LN, GUYMON RD, INGRAHAM RD, MARKET RD, OBSERVATORY RD, PACIFIC RD	0.8
		142.8

ROUTE NUMBER	*DISTRICT C*	MILES
	total from previous page	142.8
C051	CROSS CANYON RD, LAGO RD	0.7
C052	SCHMIDT RD	0.3
C053	KARNES RD, PIONEER RD	0.2
C054	ROCK CANYON RD	3.5
C055	ALAMOSA VILLAGE RD	1.6
C056	OLD RANCH RD	0.5
C057	SANTO NINO RD	0.4
	TOTAL MILES	150.0

ROUTE NUMBER	LEASE LOTS	
	ROAD NAME	MILES
	ARABIAN RD	0.5
	BASS RD	1.0
	BOAT DOCK RD	0.2
	CATFISH RD	0.8
	HARE RD	0.15
	ISLAND RD behind gate	0.1
	KETTLE TOP RD	0.2
	LIONS BEACH RD	0.4
	LOST CANYON RD	1.0
	MALLARD DR	0.2
	MARINA RD	0.3
	MITCHELL POINT RD	0.1
	N LOST CANYON RD	0.2
	PIKE RD	0.5
	RATTLESNAKE RD	0.1
	RIDGE RD	0.4
	SUNRISE RD	0.1
	THREE SISTERS RD	0.1
	TROUT RD	0.9
	TOTAL MILES	7.25

ROUTE NUMBER **LAKESHORE HIGHLANDS**

ROAD NAME	MILES
ARABIAN CIR	0.15
ARABIAN LN	0.8
CLYDESDALE PL	0.3
GREER LN (HIGHWAY)	0.1
GREER LN	0.6
HACKNEY CIR	0.1
MUSTANG RD	0.4
PAINT TRL	0.4
PINTO TRL	0.6
UNDERWOOD BLVD	0.8
UNDERWOOD CT	0.1
UNDERWOOD PL	0.4
YORKSHIRE CIR	0.4
TOTAL MILES	5.15

DISTRICT A TOTAL MILEAGE	234.8
DISTRICT B TOTAL MILEAGE	169.3
DISTRICT C TOTAL MILEAGE	150.0
LEASE LOT TOTAL MILEAGE	7.25
LAKESHORE HIGHLANDS TOTAL MILEAGE	5.15
TOTAL MILEAGE FOR ALL DISTRICTS	566.5

SIERRA COUNTY
BOARD OF COUNTY COMMISSIONERS
RESOLUTION № 110-153

CLARIFICATION OF ELECTED OFFICIAL'S SALARIES

WHEREAS, the Sierra County Board of Commissioners met upon notice of a regular meeting, duly published, at the Sierra County Administrative Offices, 1712 N. Date Street, Truth or Consequences, New Mexico 87901, on March 21, 2023; and,

WHEREAS, pursuant to NMSA 1978 Section 4-38-1 (1884) the powers of a county as a body politic and corporate shall be exercised by a board of county commissioners; and,

WHEREAS, Article IV, Section 27 of the New Mexico Constitution provides that "[n]o law shall be enacted giving any extra compensation to any public officer, servant, agent or contractor after services are rendered or contract made; nor shall the compensation of any officer be increased or diminished during his term of office, except as otherwise provided in this constitution;" and,

WHEREAS, Article XX, Section 3 of the New Mexico Constitution provides that "[t]he term of office of every state, county or district officer, except those elected at the first election held under this constitution, and those elected to fill vacancies, shall commence on the first day of January next after his election;" and,

WHEREAS, Sierra County is recognized by the New Mexico Department of Finance Administration as a ***"Class B-High"*** County per NMSA 1978, Section 4-44-4.1 (2018) for salary purposes; and,

WHEREAS, NMSA 1978, Section 4-44-4.1 (2018) sets the annual salaries of elected officials, for a Class B counties over three hundred million valuation, at the following maximum rates:
A. county commissioners, thirty thousand one hundred ninety-six dollars ($30,196) each;
B. treasurer, seventy-five thousand seven hundred thirty-three dollars ($75,733);
C. assessor, seventy-five thousand seven hundred thirty-three dollars ($75,733);
D. sheriff, seventy-eight thousand nine hundred fifty-two dollars ($78,952);
E. county clerk, seventy-five thousand seven hundred thirty-three dollars ($75,733); and
F. probate judge, twenty-six thousand four hundred eighty-two dollars ($26,482).

WHEREAS, NMSA 1978, Section 4-44-12.3 (A) (2018) states "[t]he intent of the legislature when enacting salary increases for elected county officials is to provide for equitable salary increases"; and,

WHEREAS, NMSA 1978, Section 4-44-12.3 (B) (2018) states "[i]n accordance with Sections 4-44-3 through 4-44-6 NMSA 1978, the majority of a board of county commissioners may provide for salary increases for elected county officials; provided, however, that no salary

increase shall take effect until the first day of the term of an elected county official who takes office after the date that salary increase is approved; and,

WHEREAS, elected officials commencing their new term after are eligible for the salary detailed below effective at the beginning of their term or starting at the first payroll in January 2023; and

WHEREAS, in conducting a self-audit, County Administration identified that, due to a transcription error, two of the numbers in the established salary for the Assessor were reversed, resulting in the resolution establishing a different salary than the equitable salary that was established by the Board.

NOW THEREFORE, BE IT RESOLVED, by the Board of County Commissioners that the proper compensation schedule for elected officials commencing a new term after January 1, 2023, is established as follows:

Sierra County Office	**Annual Salary**
County Commissioner	$21,533.98
County Assessor	$67,584.00
County Clerk	$67,584.00
County Treasurer	$67,584.00
County Sheriff	$70,829.00
Probate Judge	$18,103.00

NOW THEREFORE, BE IT FURTHER RESOLVED that the appointed Chief Deputy Clerk, Chief Deputy Treasurer, Chief Deputy Assessor and Chief Deputy Sheriff ("Undersheriff") be set at 90% of the salary of the offices' elected official salary and the Chief Deputy Assessor shall be entitled to applicable Appraiser qualification incentive payments pursuant to Section 4-39-5(M) NMSA 1978 not to exceed $7,500.

APPROVED, ADOPTED, AND PASSED on this 27th day of March, 2023.

Board of County Commissioners
Sierra County, New Mexico

Travis Day, Chairman Commissioner District 1	James E. Paxon, Vice Chairman Commissioner District 2
	ATTEST:
Hank Hopkins Commissioner District 3	Shelly K. Trujillo Sierra County Clerk

State of New Mexico

Shelly Trujillo
County Clerk
575-894-2840

Candace Chavez
County Treasurer
575-894-3524

Michael Huston
County Assessor
575-894-2589

Thomas Pestak
Probate Judge
575-740-4900

SIERRA COUNTY
NEW MEXICO

Amber Vaughn
County Manager
575-894-6215
1712 N Date St. Suite D
Truth or Consequences, New Mexico 87901

County of Sierra

Travis Day,
Commission Chair
575-894-6215

James E. Paxon,
Commission Vice-Chair
575-894-6215

Hank Hopkins
Commissioner
575-894-6215

Joshua Baker
Sheriff
575-894-9150

RESOLUTION NO. 110-154

A RESOLUTION CONFIRMING SIERRA COUNTY TO PARTICIPATE IN THE NEW MEXICO DEPARTMENT OF TRANSPORTATION PROJECT FUND CALL FOR PROJECTS

WHEREAS, Sierra County allocates from its General Fund, as its local 5% match to State Funds;

WHEREAS, Sierra County will have available funds representing the 5% local match of $64,750.00 for the proposed project which will be available when the agreement becomes effective, and;

WHEREAS, Attachment "A" indicates the scope and locations of the proposed work.

NOW, THEREFORE, BE IT RESOLVED THAT, The Governing Body of Sierra County, New Mexico recommends that an application be filed with the New Mexico Department of Transportation for Lower Cuchillo Creek Roadway Improvements.

PASSED, APPROVED AND ADOPTED THIS _____ day of March 2023.

_____,
Travis Day, Chairman

ATTEST:

_____
SHELLY K. TRUJILLO, COUNTY CLERK

Attachment A
Scope of Work

Project Name: Lower Cuchillo Creek Roadway Improvements

The scope of work consists of preliminary and final design, permitting, construction, and construction management services for the A007 Roadway Improvement project. Construction improvements include a new roadway culvert crossing, full depth roadway approach reconstruction, permanent signing and striping and roadside/channel stabilization including riprap revetment and adequate drainage as required for the roadway.